Greenhouse Stores

ASSEMBLY GUIDE

Ida 3300

4x8 Vitavia greenhouse

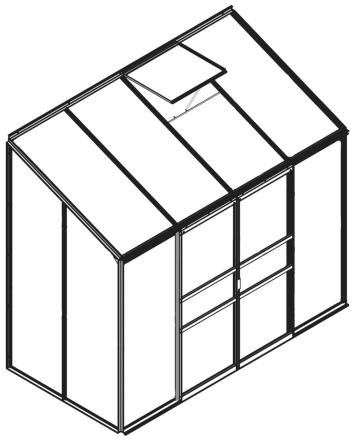

8
steps, base first

2
people needed

1279 mm × 2544 mm
base size (A × B)

Online version with every size: www.greenhousestores.co.uk/instructions/vitavia-ida-3300/

The build at a glance

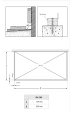

0
Prepare the base



1
Build the front wall

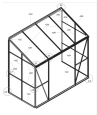

2
Build ends and roof

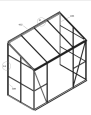

3
Fix to the house wall

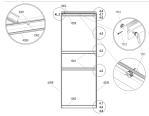

4L
Build the left-hand door

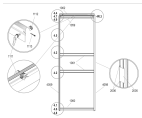

4R
Build the right-hand door

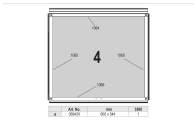

5
Fit the roof vent



6
Fit the glass

Drawings: Vitavia (Vitavia manual 007.01.1302 (Ida 3300, glass)). Words and layout: Greenhouse Stores, greenhousestores.co.uk. Keep this guide with your greenhouse.

READ THIS FIRST

Before you start

Six golden rules

1. Build frames loosely. Tighten only when the whole greenhouse stands square on its base, with both diagonals equal.
2. Never overtighten nuts 1002. The maximum torque is 3 Nm.
3. Fit extra bolts when instructed: one per roof glazing bar for the vent, two per side glazing bar.
4. Make sure the sides are perfectly vertical before fixing the greenhouse to the house wall.
5. Build with two people.
6. Always anchor your greenhouse.

Get ready

- [ ] Read the whole guide once before you start.
- [ ] Gather flat/PH2 screwdrivers, 10 mm socket spanner/wrench, 10 mm combination spanner, knife, tape measure, spirit level. Set cordless drill adjustable torque low.
- [ ] Wear gloves, safety glasses, sturdy shoes and a hat. Aluminium edges are sharp. Clear up broken glass straight away.
- [ ] Open one bundle at a time and keep opened bundles apart. Mixed bundles are the main cause of lost-part searches.
- [ ] Check every part against the parts check pages. Contact Greenhouse Stores before you begin if anything is missing.
- [ ] Read single-frame drawings as views from inside the greenhouse. Read double-frame drawings as views from outside.
- [ ] Choose a sunny spot with as much shelter from wind as possible.

Read next: 10 common greenhouse installation mistakes (and how to avoid them)

Single frame: inside view Double frame: outside view

BEFORE STEP 1

Parts check

Open one bundle at a time. Tick each part as you find it. The number in green is how many your Ida 3300 should have.

Bars and profiles



1020
Glazing seal (reel)
49000 mm **×1**

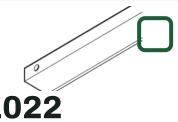

1022
Sill bar
1240 mm **×2**

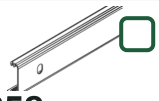

1059
Upper bar
621 mm **×2**



1060
Door bar
621 mm **×2**

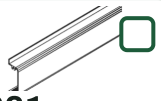

1061
621 mm **×4**

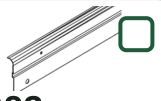

1062
Door bar
613 mm **×2**



1063
Window sill
635 mm **×1**



1064
Vent top bar
602 mm **×1**

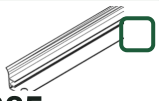

1065
Vent side bar
520 mm **×2**



1066
Vent bottom bar
602 mm **×1**



1067
Window opener
295 mm **×1**

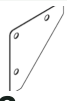

1092
Corner plate
120 mm **×8**

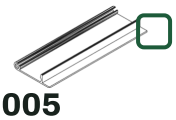

2005
100 mm **×1**

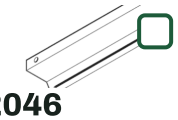

2046
2484 mm **×1**

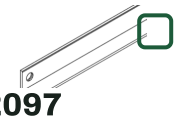

2097
619 mm **×2**

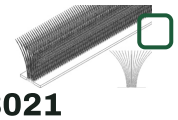

3021
Door seal
1800 mm **×2**

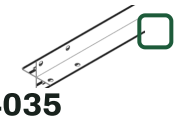

4035
1650 mm **×2**

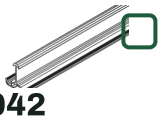

4042
1650 mm **×2**



4049
1704 mm **×2**

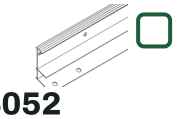

4052
Ridge bar
2484 mm **×1**

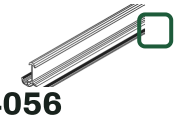

4056
Roof glazing bar
1330.5 mm **×3**



4059
Outside side bar
1630 mm **×2**

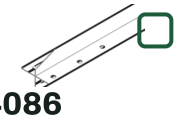

4086
Gable end bar
1354 mm **×1**

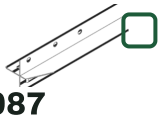

4087
Gable end bar
1354 mm **×1**

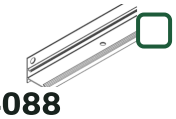

4088
Vertical wall bar
2151 mm **×1**



4089
Vertical wall bar
2151 mm **×1**

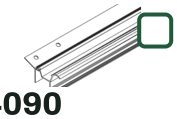

4090
Eaves door track
2484 mm **×1**

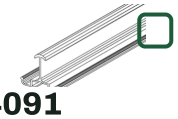

4091
Side glazing bar
1902 mm **×1**

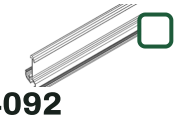

4092
Side glazing bar
1902 mm **×1**



4094
Side brace
1222 mm **×4**

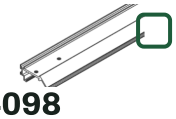

4098
Inside side bar
1630 mm **×1**

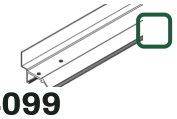

4099
Inside side bar
1630 mm **×1**

Fixings and small parts

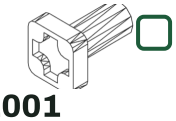

1001
Bolt
M6 × 12 **×83**

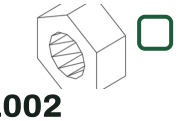

1002
Nut
M6 **×84**

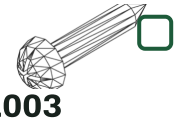

1003
Screw
3.5 × 16 **×32**

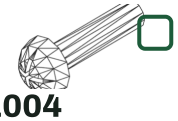

1004
M4 × 16 **×4**



1006
Screw
3.5 × 6 **×6**

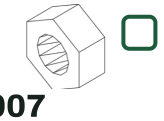

1007
Nut
M4 **×4**



1009
Washer
Ø8/4 **×4**



1011
Glazing spring clip
70 **×170**



1012
Glass retaining clip
11 **×50**



1014
Door glider
20 **×4**



1015
Door roller
Ø22 **×4**

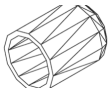

1019
Plastic cap
15 **×1**



1111
Door fixer
37.5 **×2**



1112
Door fixer
7.4 **×2**

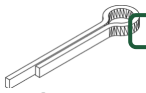

1113
Door fixer
25 **×2**



1500
Bolt
M6 × 5 **×2**



1515
Nut
M6 **×2**

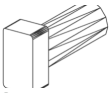

2001
Corner bolt
M6 × 12 **×1**

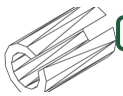

2006
10 **×2**

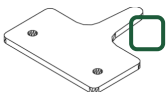

2016
Window fixer
40 **×2**



7395
Washer
Ø12/6.5 **×7**

STEP 0

0 Prepare the base

Start with an exactly square, level base at 90 degrees to the house wall.

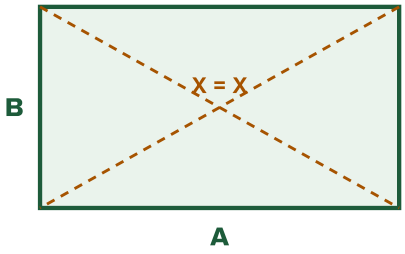

	IDA 3300
A	1279 mm
B	2544 mm

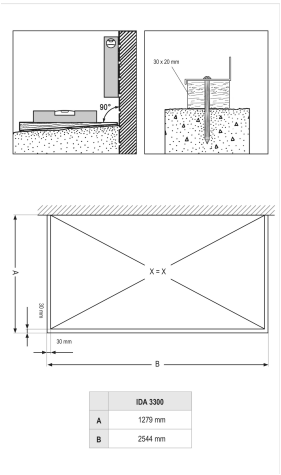

Vitavia drawing 0. The circled numbers match the pictures below.

INSTALLER TIP

Use ground spikes or anchor legs only in soil. On concrete or paving, bolt the base down with suitable fixings; use one method, never both.

WATCH OUT

If the base is not square and level, nothing above it will be. Glass will not fit a frame that is out of square.

0.1

The base must be exactly square and level, at 90 degrees to the house wall; both diagonals must match. A zinc-coated steel base is sold as an accessory.

0.2

Only if you build your own stone or concrete foundation, use this page's A and B sizes; extend below frost level. Put treated timber between foundation and aluminium frame, at least 18 mm high, no more than 32 mm wide; fix it to the foundation with 50 mm bolts (not supplied).

0.3

On a very windy, exposed site, drill through the greenhouse bottom profile and the steel base. Bolt them together.

STEP 1

1 Build the front wall

Build the front wall flat on the ground, with every bolt loose and corner plates 1092 loosely connected.

YOU NEED

 **1001** ×18	 **1002** ×18
 **1092** ×2	 **2046** ×1
 **2097** ×2	 **4035** ×2
 **4042** ×2	 **4049** ×2
 **4090** ×1	

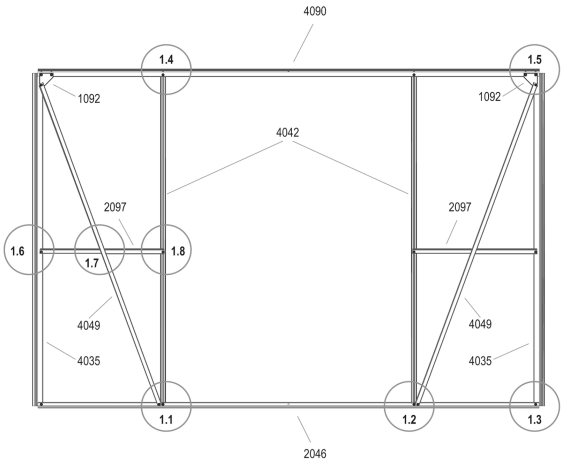

Vitavia drawing 1. The circled numbers match the pictures below.

INSTALLER TIP

Lay the parts on a blanket or lawn to protect the finish. Leave every nut loose so the frame can flex when you square it in step 3.

Watch: Build the sides

Scan with your phone camera. Vitavia video.

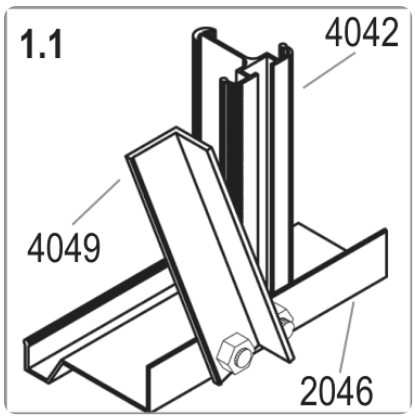

1.1

Bolt bars 4049 and 4042 to bottom bar 2046 as shown.

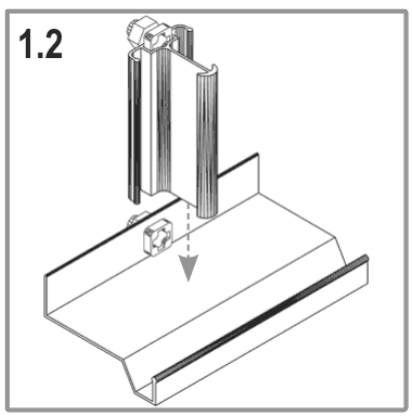

1.2 OUTSIDE VIEW

View the connection from outside. Slide a bolt into the channel of bottom bar 2046 to join bar 4042, as the arrow shows.

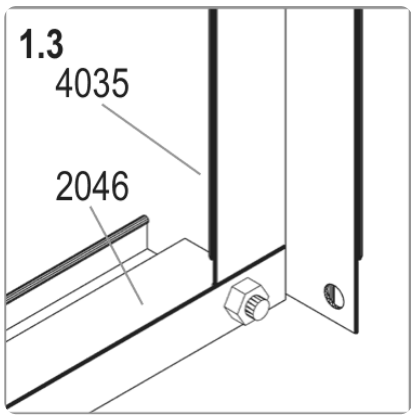

1.3

Bolt bar 4035 to bottom bar 2046 at each end.

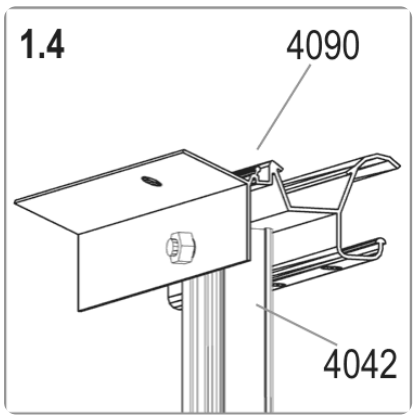

1.4

Bolt the top of bar 4042 to eaves door track 4090.

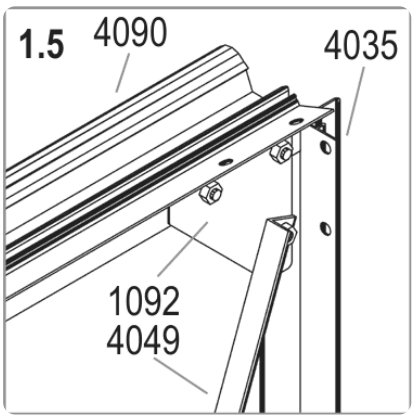

1.5

Loosely join eaves door track 4090, bar 4035 and bar 4049 with corner plate 1092 at each upper corner.

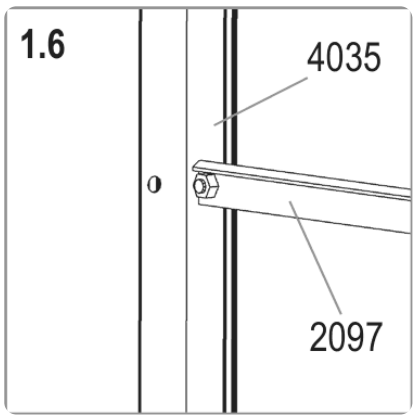

1.6

Bolt bar 2097 to bar 4035.

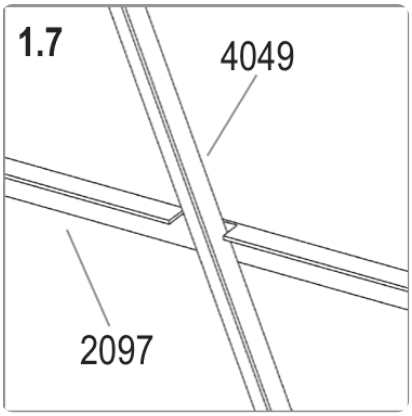

1.7

Position bar 2097 across bar 4049 as shown.

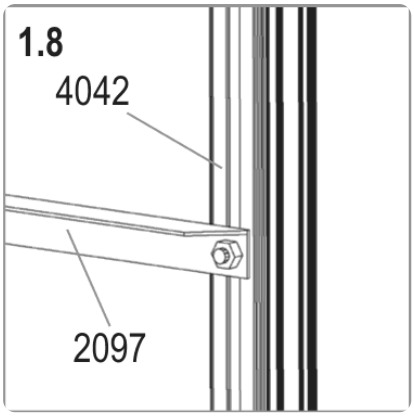

1.8

Bolt the other end of bar 2097 to bar 4042.

STEP 2

2 Build ends and roof

Connect the ends and roof with all bolts still loose.

YOU NEED

 **1001** ×46	 **1002** ×46
 **1022** ×2	 **1092** ×6
 **4052** ×1	 **4056** ×3
 **4086** ×1	 **4087** ×1
 **4088** ×1	 **4089** ×1
 **4091** ×1	 **4092** ×1
 **4094** ×4	 **7395** ×7

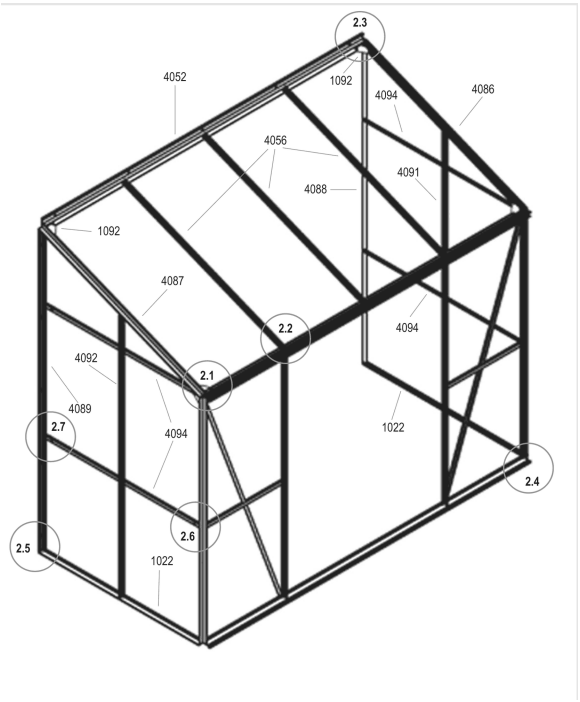

Vitavia drawing 2. The circled numbers match the pictures below.

INSTALLER TIP

Slide the extra bolts into each glazing bar before you fit the bar.

WATCH OUT

Remember two extra bolts in each side glazing bar. Each roof glazing bar 4056 needs one extra bolt for the roof vent in step 5.

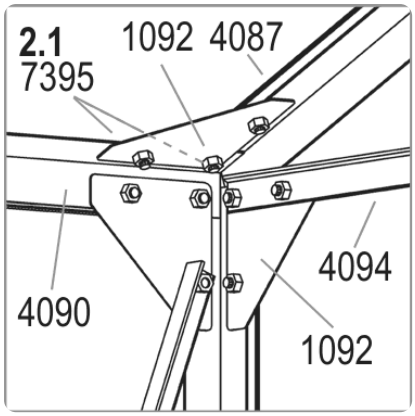

2.1

Connect gable end bars 4086 and 4087 to eaves door track 4090, with washers 7395 at every track connection. Loosely fit corner plate 1092 above the eaves and join side brace 4094 as shown.

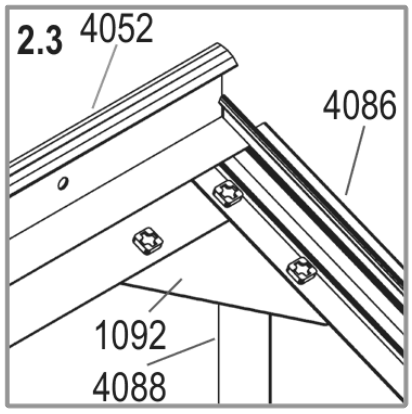

2.3 OUTSIDE VIEW

Connect gable end bars 4086 and 4087 to vertical wall bars 4088 and 4089 and ridge bar 4052. Loosely fit corner plate 1092 at the roof ridge, as shown from outside.

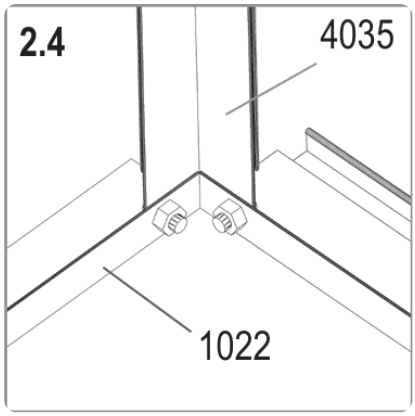

2.4

Bolt sill bar 1022 to bar 4035 at the front corner.

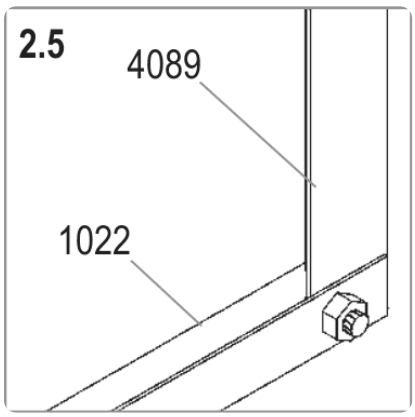

2.5

Bolt sill bar 1022 to vertical wall bar 4089 at the wall end.

DO THIS NOW

Connect side glazing bars 4091 and 4092, with two extra bolts in each bar. Then connect side braces 4094.

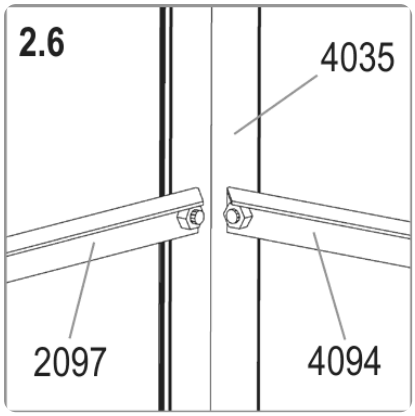

2.6

Bolt side brace 4094 and bar 2097 to bar 4035 as shown.

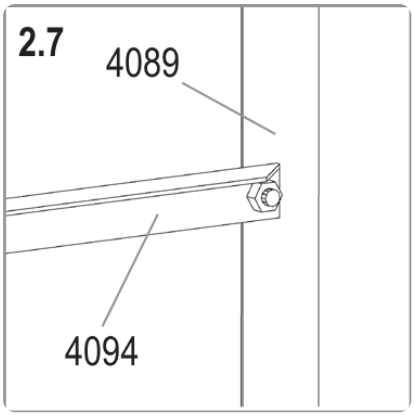

2.7

Bolt the other end of side brace 4094 to vertical wall bar 4089.

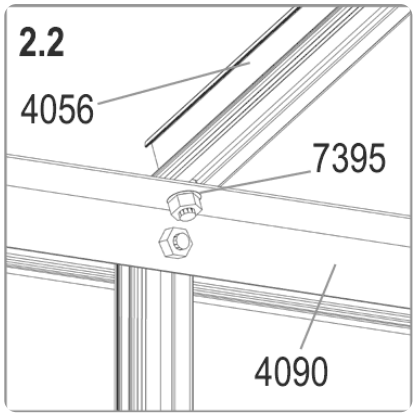

2.2

Connect three roof glazing bars 4056 between eaves door track 4090 and ridge bar 4052, with washers 7395 at the eaves. Insert one extra bolt into each bar for the roof vent.

STEP 3

3 Fix to the house wall

Work with two people to square the frame and fix it to the house wall.

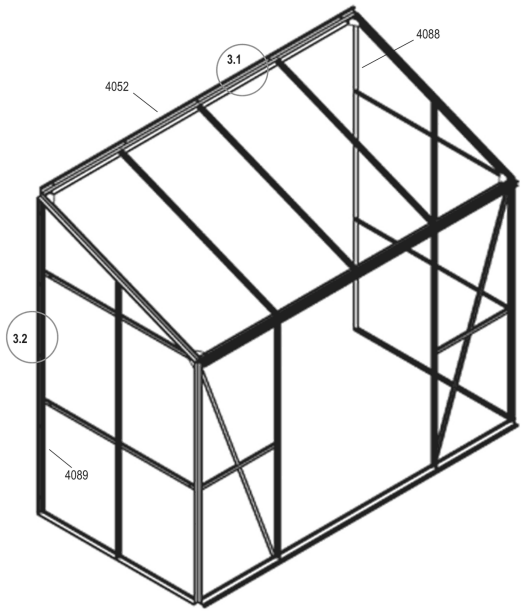

Vitavia drawing 3. The circled numbers match the pictures below.

INSTALLER TIP

Check the sides are perfectly vertical before you mark the holes on the wall.

WATCH OUT

The wall plugs, screws and drill are not included.

DO THIS NOW

Position the greenhouse on the prepared base or foundation and connect loosely; adjust until completely square, with equal diagonals. Tighten all bolts to a maximum of 3 Nm; check the sides are perfectly vertical.

DO THIS NOW

Mark the wall through pre-drilled holes in vertical wall bars 4088 and 4089 and ridge bar 4052. Lift the frame off the base; drill 6 mm holes at the marks and insert 6 mm plugs.

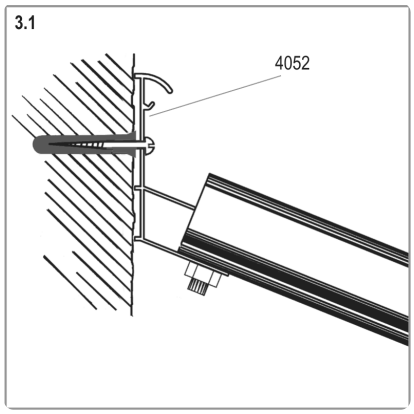

3.1 OUTSIDE VIEW

Put the frame back on the base. Screw ridge bar 4052 to the wall as shown from outside.

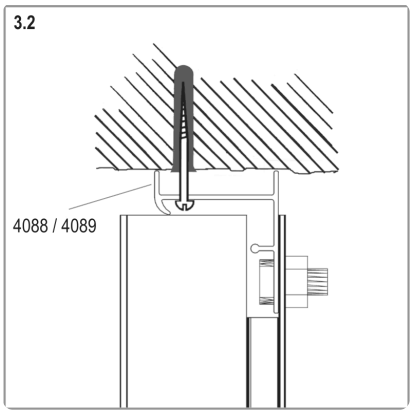

3.2 OUTSIDE VIEW

Screw vertical wall bars 4088 and 4089 to the wall as shown from outside.

DO THIS NOW

Finally, fix the frame to the base.

STEP 4L

4L Build the left-hand door

Build and hang the first of the two sliding doors, with inside side bar 4099 on the left-hand door.

YOU NEED

	**1001** ×3		**1002** ×4
	**1003** ×16		**1004** ×2
	**1007** ×2		**1009** ×2
	**1014** ×2		**1015** ×2
	**1059** ×1		**1060** ×1
	**1061** ×2		**1062** ×1
	**1111** ×1		**1112** ×1
	**1113** ×1		**1500** ×1
	**1515** ×1		**2001** ×1
	**3021** ×1		**4059** ×1
	**4099** ×1		

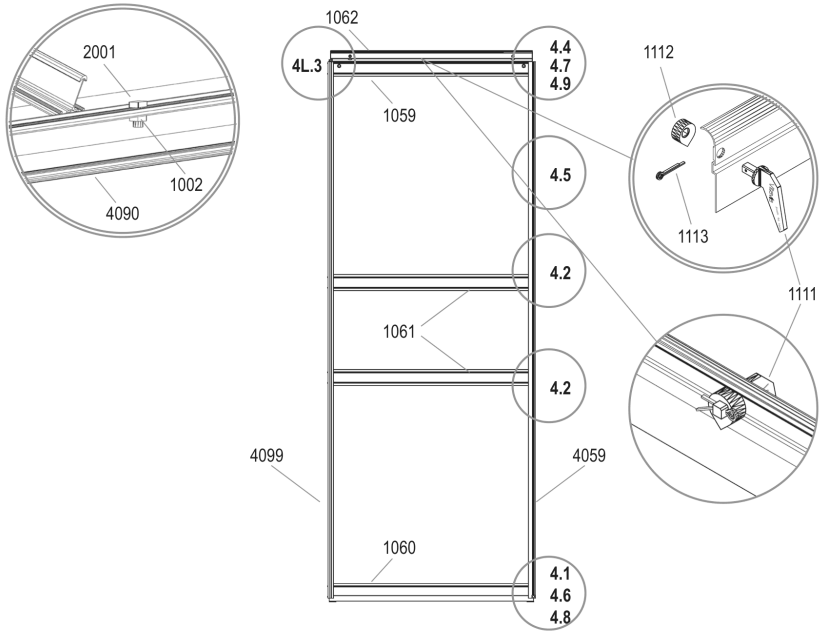

Vitavia drawing 4L. The circled numbers match the pictures below.

INSTALLER TIP

If the door binds or jumps the track, the frame is almost certainly not quite square. Check the frame before you force the door.

WATCH OUT

Never stand an assembled door on gliders 1014; this damages them. Fit inside side bar 4099 on the left-hand door and 4098 on the right-hand door.

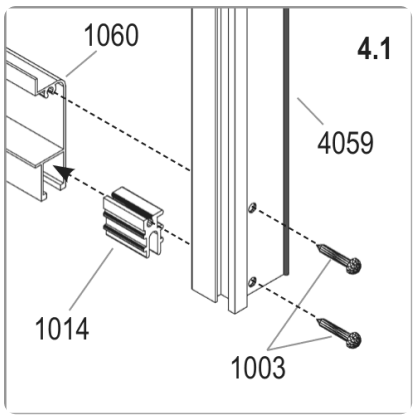

4.1

Push a door glider 1014 onto each end of door bar 1060. Screw outside side bar 4059 to door bar 1060 with screws 1003.

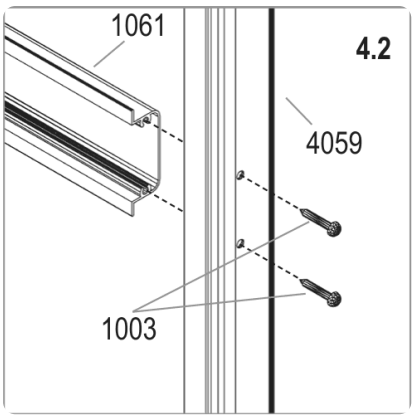

4.2

Screw the two bars 1061 to outside side bar 4059 with screws 1003.

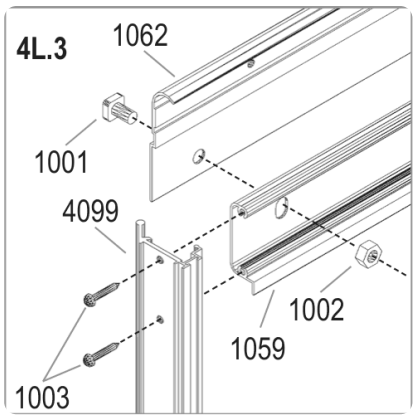

4L.3

Bolt door bar 1062 to upper bar 1059 with bolt 1001 and nut 1002. Screw inside side bar 4099 on with screws 1003.

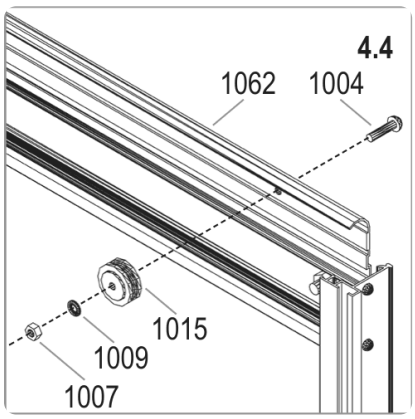

4.4

Fix the two door rollers 1015 to door bar 1062 with bolt 1004, washer 1009 and nut 1007.

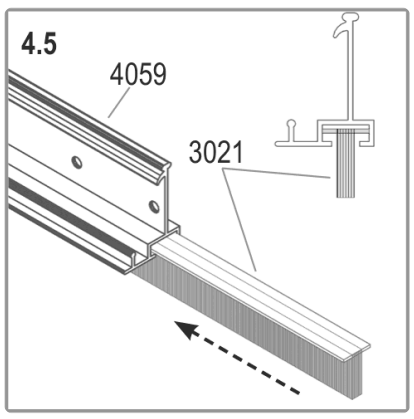

4.5 OUTSIDE VIEW

Slide door seal 3021 into outside side bar 4059 as shown from outside.

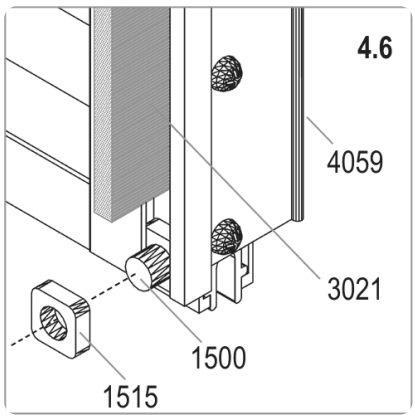

4.6

Slide bolt 1500 into the bottom of the channel that holds door seal 3021. Fix it with nut 1515.

DO THIS NOW

Connect door fixer parts 1111, 1112 and 1113 as the door drawing shows.

DO THIS NOW

Put bolt 2001 into the hole in eaves door track 4090, with nut 1002. Follow the round drawing at the top left of the page.

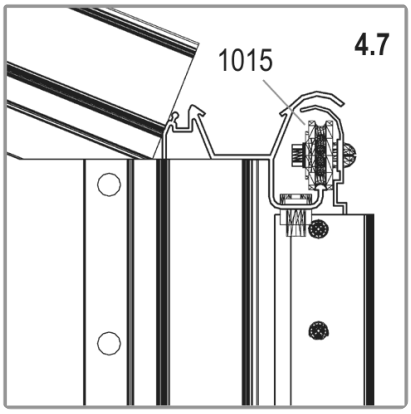

4.7 OUTSIDE VIEW

Lift the door and slide door rollers 1015 into door runner bar 4090, as shown from outside.

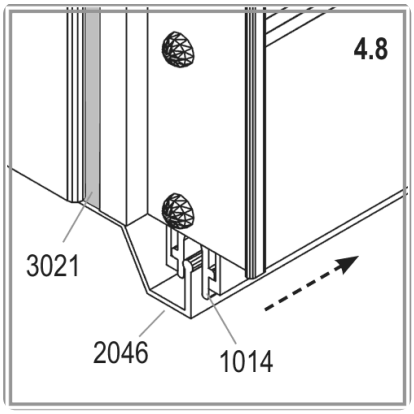

4.8 OUTSIDE VIEW

Check door gliders 1014 also run in the bottom track of bar 2046, as shown from outside.

STEP 4R

4R Build the right-hand door

Greenhouse Stores

Build and hang the second sliding door, with inside side bar 4098 on the right-hand door.

YOU NEED

1001 ×3	**1002** ×3
1003 ×16	**1004** ×2
1007 ×2	**1009** ×2
1014 ×2	**1015** ×2
1059 ×1	**1060** ×1
1061 ×2	**1062** ×1
1111 ×1	**1112** ×1
1113 ×1	**1500** ×1
1515 ×1	**2005** ×1
2006 ×2	**3021** ×1
4059 ×1	**4098** ×1

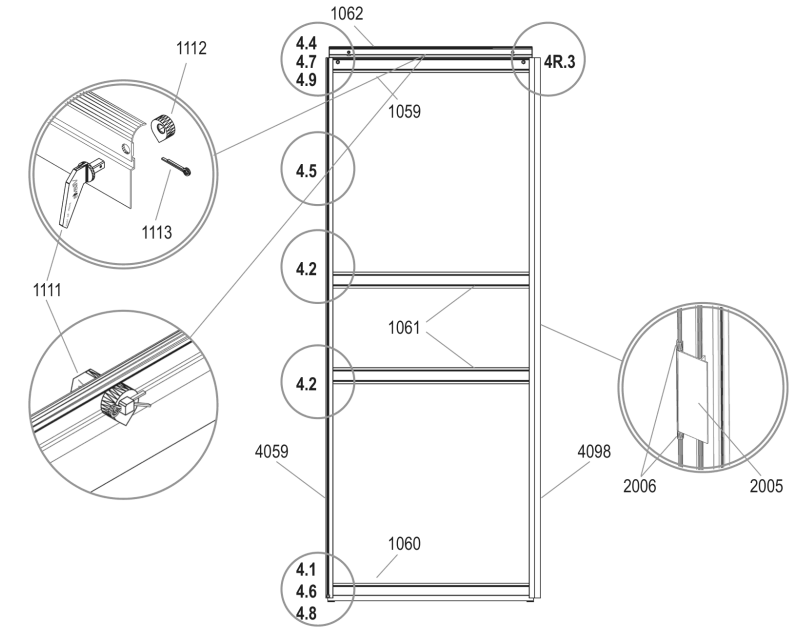

Vitavia drawing 4R. The circled numbers match the pictures below.

INSTALLER TIP

Hang the right-hand door the same way as the left-hand door. Adjust both until they slide freely.

WATCH OUT

Never stand an assembled door on gliders 1014. This damages them.

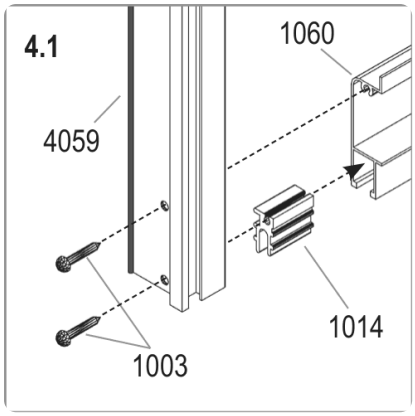

4.1

Push a door glider 1014 onto each end of door bar 1060. Screw outside side bar 4059 to door bar 1060 with screws 1003.

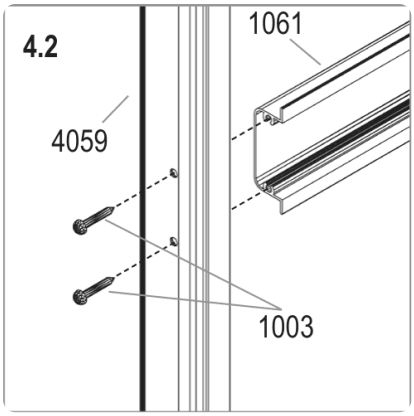

4.2

Screw the two bars 1061 to outside side bar 4059 with screws 1003.

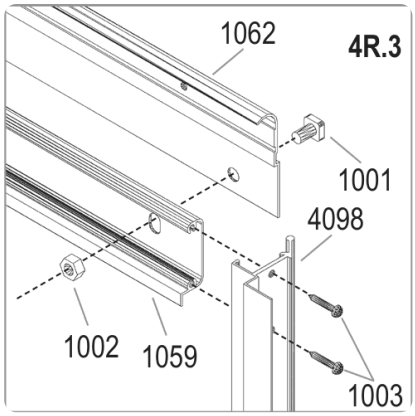

4R.3

Bolt door bar 1062 to upper bar 1059 with bolt 1001 and nut 1002. Screw inside side bar 4098 on with screws 1003.

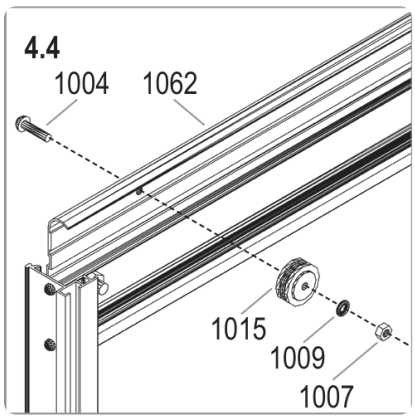

4.4

Fix the two door rollers 1015 to door bar 1062 with bolt 1004, washer 1009 and nut 1007.

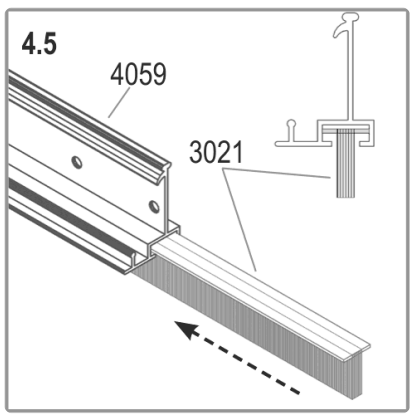

4.5 OUTSIDE VIEW

Slide door seal 3021 into outside side bar 4059 as shown from outside.

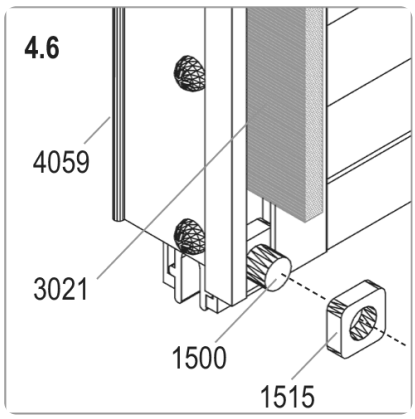

4.6

Slide bolt 1500 into the bottom of the channel that holds door seal 3021. Fix it with nut 1515.

DO THIS NOW

Connect door fixer parts 1111, 1112 and 1113 as the door drawing shows.

DO THIS NOW

Fit part 2005 and the two parts 2006 to inside side bar 4098. Follow the round drawing on the right of the page.

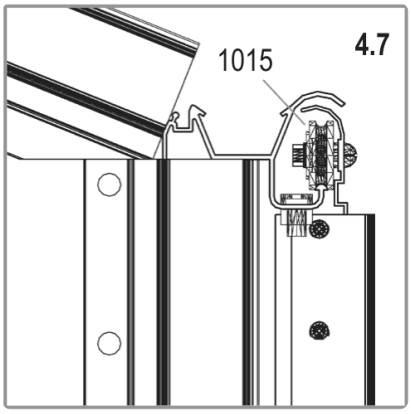

4.7 OUTSIDE VIEW

Lift the door and slide door rollers 1015 into door runner bar 4090, as shown from outside.

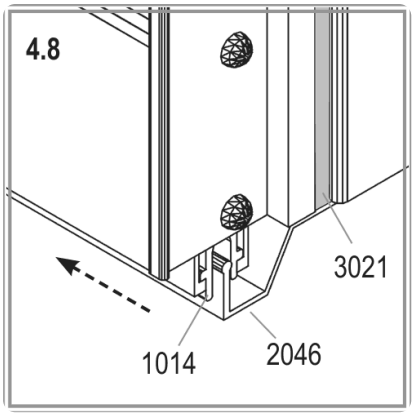

4.8 OUTSIDE VIEW

Check door gliders 1014 also run in the bottom track of bar 2046, as shown from outside.

DO THIS NOW

Once both doors are in place, put nuts and bolts into the end of door runner bar 4090 as stops. Adjust the doors until they slide freely.

STEP 5

5 Fit the roof vent

Build the roof vent, then hook it into the ridge bar and fit the opener.

YOU NEED

1001 ×4	**1002** ×4
1006 ×6	**1019** ×1
1063 ×1	**1064** ×1
1065 ×2	**1066** ×1
1067 ×1	**2016** ×2

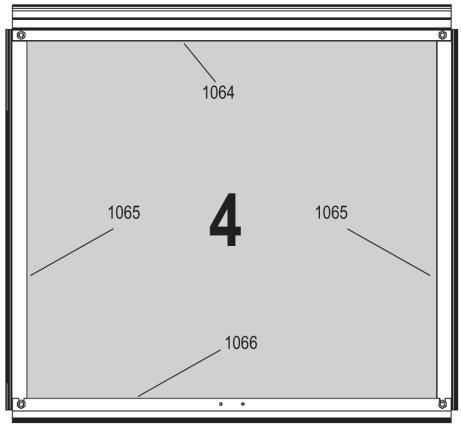

	Art. No.	mm	3300
4	369430	600 x 544	1

Vitavia drawing 5. The circled numbers match the pictures below.

INSTALLER TIP

Fit window sill 1063, the slam bar, flat edge up, with its grooved lip down towards the pane below. Recheck its position if that pane will not sit snugly.

Watch: Build and fit the window

Scan with your phone camera. Vitavia video.

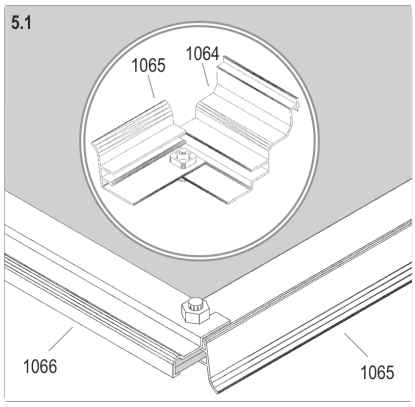

5.1

For glass up to 4 mm thick, join side bars 1065 and top bar 1064 as shown.

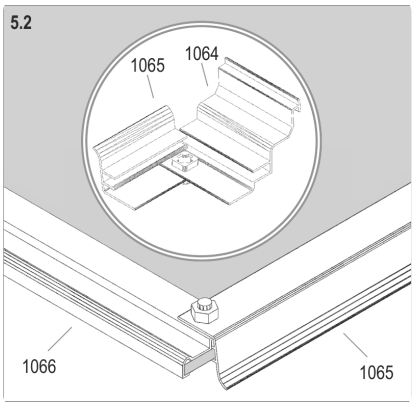

5.2

For glass 4 mm or thicker, join side bars 1065 and top bar 1064 as this drawing shows instead.

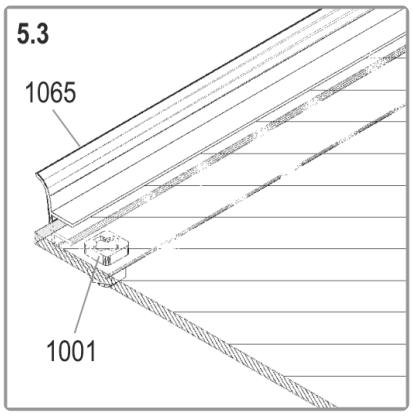

5.3 OUTSIDE VIEW

Put bolts 1001 for bottom bar 1066 into the prepared holes; slide the vent glass into side bar 1065 tracks. Fit bottom bar 1066 and check the vent is completely square before tightening the bolts.

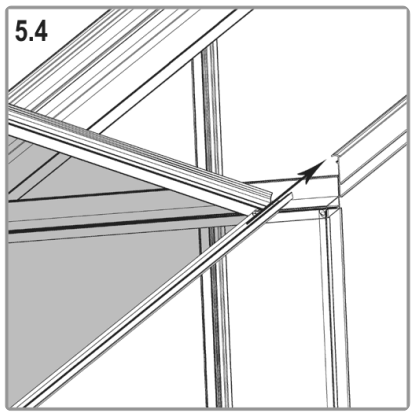

5.4 OUTSIDE VIEW

Hook the vent into the ridge bar from one end of the greenhouse, as shown from outside.

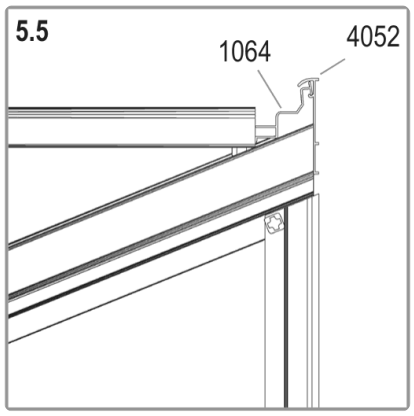

5.5 OUTSIDE VIEW

Hook vent top bar 1064 over ridge bar 4052, as shown from outside.

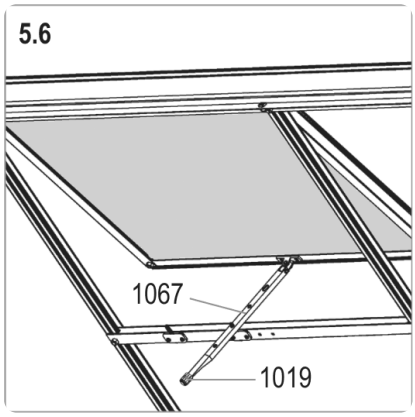

5.6 OUTSIDE VIEW

Slide the vent along to your chosen position. Push plastic cap 1019 over the end of window opener 1067.

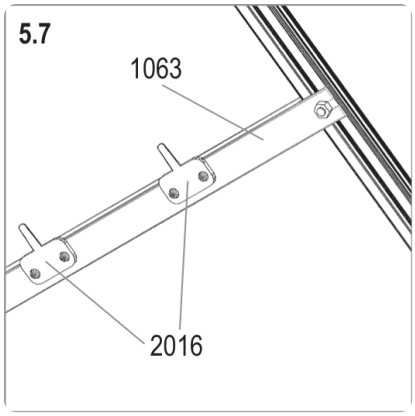

5.7 OUTSIDE VIEW

Fix window sill 1063 to the extra bolts in the roof glazing bars. Screw both window fixers 2016 onto window sill 1063 with screws 1006.

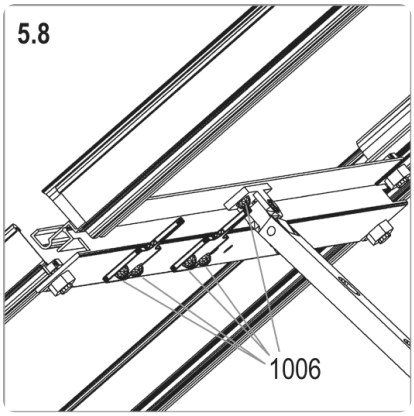

5.8 OUTSIDE VIEW

Screw window opener 1067 to vent bottom bar 1066 with screws 1006.

STEP 6

6 Fit the glass

Fit the glazing seal first, then glaze the roof and sides from the bottom upwards.

YOU NEED



1011 ×164



1012 ×46



1020 ×1

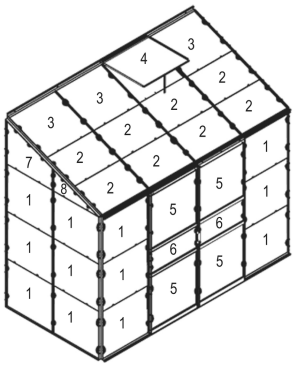

	No.	mm	3300
1	3679041	610 x 559	18
2	3679461	610 x 408	8
3	3679471	610 x 549	3
4	3679491	600 x 544	1
5	3679011	610 x 610	4
6	3679481	610 x 248	2
7	3679571	610 x 512 x 264	2
8	3679581	610 x 260 x 12	2
Total			40

Vitavia drawing 6. The circled numbers match the pictures below.

INSTALLER TIP

Soak the whole glazing seal reel in hot soapy water first to soften it for easier fitting. Check the glazing layout if a pane looks too big; it usually belongs in another opening.

WATCH OUT

Never force a pane; this cracks glass. If it will not seat, correct the out-of-square frame first.

Watch: Fitting the glazing rubber

Scan with your phone camera. Vitavia video.

Watch: Glazing with horticultural glass

Scan with your phone camera. Vitavia video.

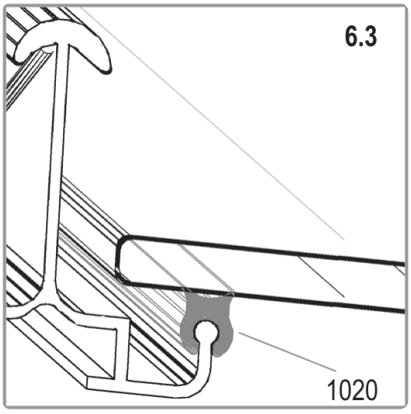

6.3 OUTSIDE VIEW

Press glazing seal 1020 onto the aluminium profiles and cut it to length. Do this before you fit any glass.

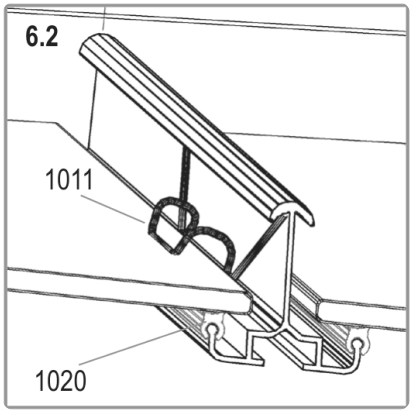

6.2 OUTSIDE VIEW

Start the roof glazing at the eave. Fix the first pane with glazing spring clips 1011.

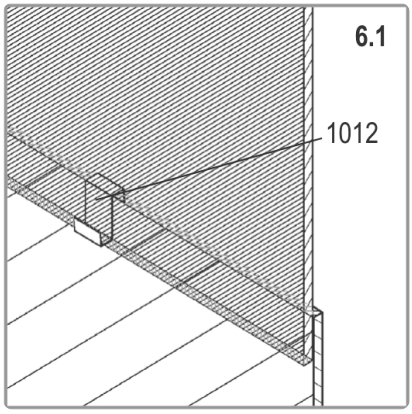

6.1 OUTSIDE VIEW

Place each next pane over the pane directly below it. Hold it with glass retaining clips 1012 between the panes.

DO THIS NOW

Glaze the sides from the bottom upwards. If you chose polycarbonate sheets instead of glass, follow the instructions packed with the sheets.

Horticultural glass for your greenhouse

PANE	SIZE (MM)	IDA 3300
1	610 × 559	18
2	610 × 408	8
3	610 × 549	3
4	600 × 544	1
5	610 × 610	4
6	610 × 248	2
7	610 × 512 × 264	2
8	610 × 260 × 12	2
	Total	**40**

Pane numbers match the glazing layout in the drawing above.

LAST JOBS

Finish and look after it

Finish

- [ ] Anchor the greenhouse. This is not optional.
- [ ] If you wish, seal the edges with neutral silicone, which is not supplied.
- [ ] Stick the warning label inside the greenhouse.
- [ ] Stick the model label onto door bar 1062. You will need it to order spare parts.
- [ ] Keep this guide somewhere safe.

Looking after it

- [ ] Shut both doors and the roof vent in high winds.
- [ ] Clear the roof or support it in heavy snow. Heat the greenhouse in winter.
- [ ] Wash occasionally with a mild detergent that does not attack aluminium or the glass fixing clips.
- [ ] Keep the upper and lower door tracks clean so grit does not build up.
- [ ] Add the greenhouse to your home insurance and check local building rules about where it can go.

Drawings reproduced from the Vitavia assembly instructions (Vitavia manual 007.01.1302 (Ida 3300, glass)). Greenhouse Stores, greenhousestores.co.uk.