Greenhouse Stores

ASSEMBLY GUIDE

Ida 3300

4x8 Vitavia greenhouse

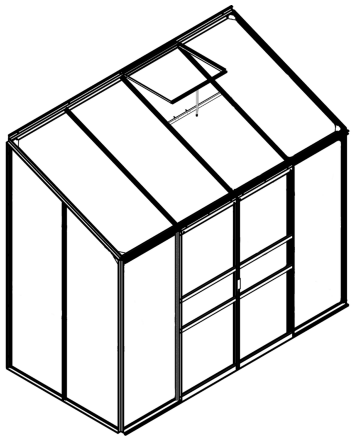

8
steps, base first

2
people needed

2544 mm × 1279 mm
base size (A × B)

Online version with every size: www.greenhousestores.co.uk/instructions/vitavia-ida-3300-polycarbonate/

The build at a glance

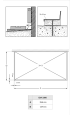

0
Prepare the base

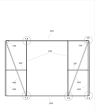

1
Build the front wall

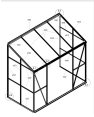

2
Build the ends and roof

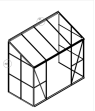

3
Fix to the house wall

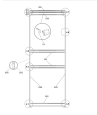

4L
Fit the left-hand door

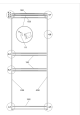

4R
Fit the right-hand door

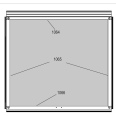

5
Fit the roof vent



6
Fit the polycarbonate panes

Drawings: Vitavia (Vitavia manual 007.01.0901 with polycarbonate glazing sheet 007PC.00.0811 (Ida 3300, polycarbonate)). Words and layout: Greenhouse Stores, greenhousestores.co.uk. Keep this guide with your greenhouse.

READ THIS FIRST

Before you start

Six golden rules

1. Build frames loosely. Tighten only when the greenhouse is square on its base and both diagonals match.
2. Do not overtighten nuts and bolts.
3. Add one bolt per roof glazing bar for the vent, and two per side glazing bar when instructed.
4. Make sure the sides are perfectly vertical before you fix the greenhouse to the house wall.
5. Build with two people.
6. Do not force any part or pane that will not fit.

Get ready

- [ ] Read the whole guide once before you start.
- [ ] Have flat and crosshead PH2 screwdrivers, a 10 mm spanner or wrench, and a drill. Drill wall holes and step 6's 2 mm holes; drill not included.
- [ ] Wear safety glasses, gloves, sturdy shoes and a hat. Sharp edges and corners can cause injury.
- [ ] Open one bundle at a time and keep opened bundles apart. Mixed bundles make parts hard to identify.
- [ ] Check every part against the parts check pages. Contact Greenhouse Stores before you begin if anything is missing.
- [ ] Single-frame drawings show the view from inside the greenhouse. Double-frame drawings show the view from outside.
- [ ] Choose a sunny spot with as much shelter from the wind as possible.

Read next: 10 common greenhouse installation mistakes (and how to avoid them)

Single frame: inside view Double frame: outside view

BEFORE STEP 1

Parts check

Open one bundle at a time. Tick each part as you find it. The number in green is how many your Ida 3300 should have.

Bars and profiles

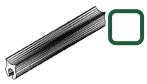

1020
Glazing seal (reel)
44000 mm **×1**

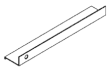

1022
Sill bar
1240 mm **×2**



1059
Upper bar
621 mm **×2**



1060
Door bar
621 mm **×2**



1061
621 mm **×4**



1062
Door bar
613 mm **×2**



1063
Window sill
635 mm **×1**



1064
Vent top bar
602 mm **×1**

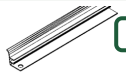

1065
Vent side bar
522 mm **×2**

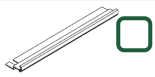

1066
Vent bottom bar
602 mm **×1**



1067
Window opener
295 mm **×1**



4042
1650 mm **×2**



4043
Vertical wall bar
2148 mm **×1**



4048
Vertical wall bar
2148 mm **×1**

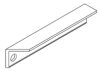

4049
1704 mm **×2**



4052
Ridge bar
2484 mm **×1**



4056
Roof glazing bar
1333 mm **×3**



4059
Outside side bar
1628 mm **×2**



4071
Side glazing bar
1899 mm **×1**



4072
Side glazing bar
1899 mm **×1**

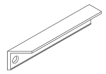

4094
Side brace
1222 mm **×4**



4098
Inside side bar
1628 mm **×1**



4099
Inside side bar
1628 mm **×1**



1092
Corner plate
120 mm **×8**



2005
100 mm **×1**

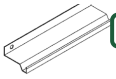

2046
2484 mm **×1**

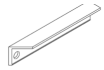

2097
619 mm **×2**



3021
Door seal
1800 mm **×2**

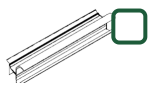

4029
Eaves door track
2484 mm **×1**

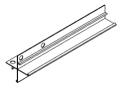

4035
1650 mm **×2**

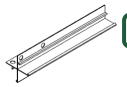

4039
Gable end bar
1356 mm **×1**

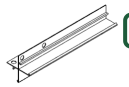

4040
Gable end bar
1356 mm **×1**

Fixings and small parts



1019
Plastic cap
15 **×1**



1001
Bolt
M6 × 10 **×85**



1002
Nut
M6 **×85**



1003
Screw
3.5×16 **×32**



1004
M4×16 **×4**



1006
Screw
3.5×6 **×6**



1007
Nut
M4 **×4**



1009
Washer
M4 **×4**



1011
Glazing spring clip
70 **×170**



1012
Glass retaining clip
11 **×50**



1014
Door glider
25 **×4**



1015
Door roller
22 **×4**



1016
Window fixer
40 **×2**



1111
Door fixer
22 **×2**



2001
Corner bolt
M6×10 **×2**



2002
Screw
M4.5×40 **×15**

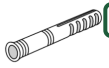

2003
Wall plug
M6 **×15**



2006
10 **×2**

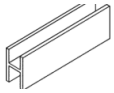

24674
H-plastic
- **×4**



015140
Screw
3.5×19 **×4**



015141
Screw
3.5 × 13 **×6**



015142
Screw
3.5 × 9.5 **×6**

STEP 0

0 Prepare the base

Greenhouse Stores

Prepare a square, level base before you assemble the greenhouse.

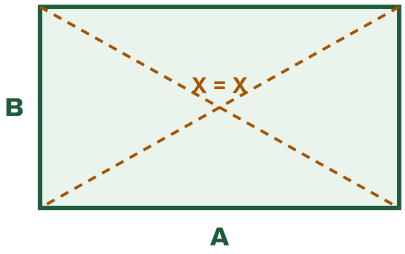

	IDA 3300
A	2544 mm
B	1279 mm

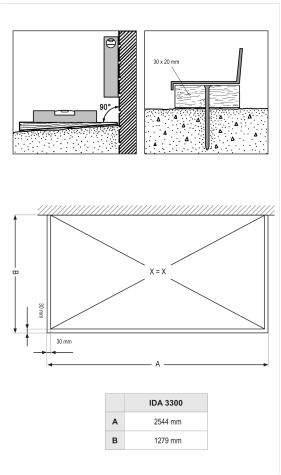

Vitavia drawing 0. The circled numbers match the pictures below.

INSTALLER TIP

Use ground spikes or anchor legs only in soil. On concrete or paving, bolt the base down with suitable fixings; use one method, not both.

WATCH OUT

If the base is not square and level, the frame above will be wrong. Panes will not fit a frame that is out of square.

0.1

Make the base exactly square and level, at 90 degrees to the house wall, with both diagonals equal. A zinc-coated steel base is sold separately.

0.2

Only when building your own stone or concrete foundation, use this page's A and B sizes. Fit treated timber, minimum 18 mm high, maximum 32 mm wide, between foundation and aluminium frame; fix using unsupplied 50 mm foundation bolts.

0.3

On very windy, exposed sites, drill through the greenhouse bottom profile and steel base, then bolt them together.

STEP 1

1 Build the front wall

Build the front wall flat on the ground, with every bolt loose and corner plates 1092 loosely connected.

YOU NEED

1001 ×18	**1002** ×18
1092 ×2	**2046** ×1
2097 ×2	**4029** ×1
4035 ×2	**4042** ×2
4049 ×2	

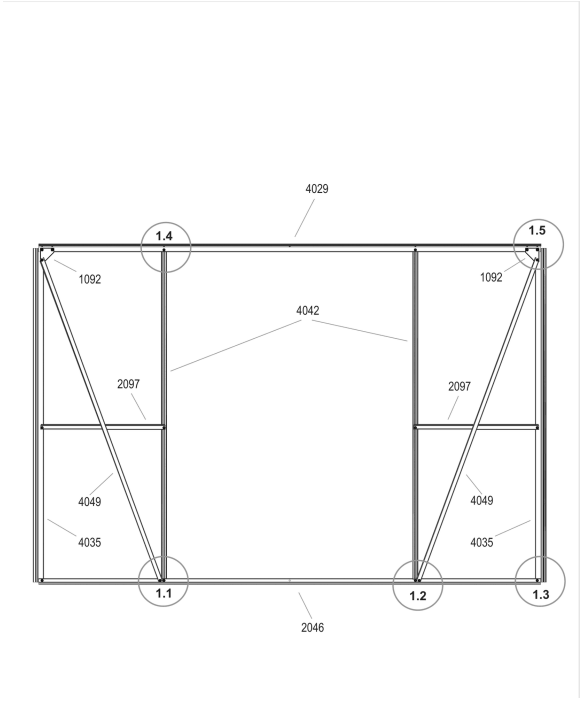

Vitavia drawing 1. The circled numbers match the pictures below.

INSTALLER TIP

Lay the parts on a blanket or lawn to protect the finish. Leave every nut loose so the frame can flex when you square it in step 3.

Watch: Build the sides

Scan with your phone camera. Vitavia video.

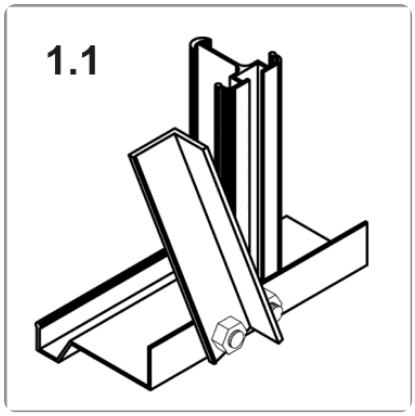

1.1

Where bar 4049 meets bottom bar 2046, bolt bars 4049 and 4042 to bottom bar 2046 as shown.

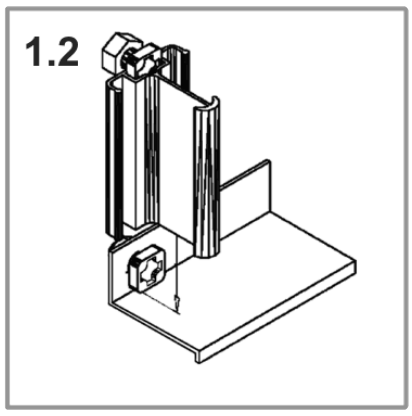

1.2 OUTSIDE VIEW

Slide a bolt into the channel of bottom bar 2046 to join bar 4042 as shown.

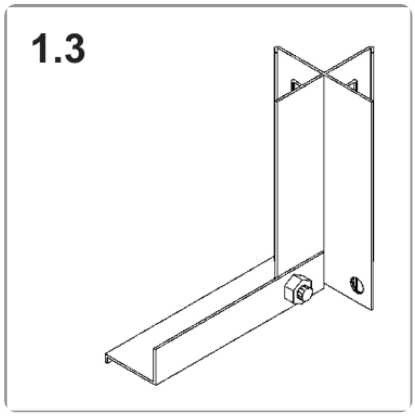

1.3

Bolt bar 4035 to bottom bar 2046 at each end.

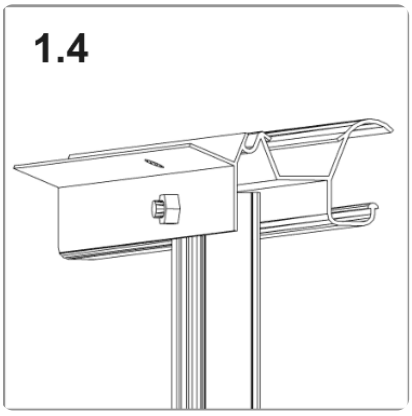

1.4

Bolt the top of bar 4042 to eaves door track 4029.

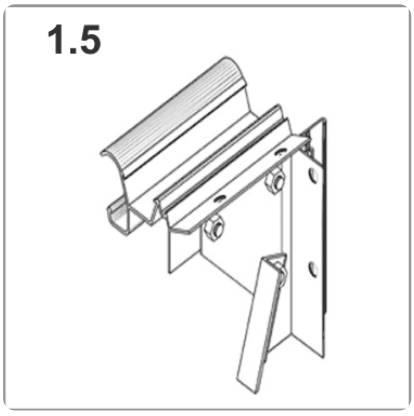

1.5

Loosely connect corner plate 1092 to eaves door track 4029, bar 4035 and bar 4049 at each top corner.

DO THIS NOW

Fit the two bars 2097 between bars 4035 and 4042, one on each side, as shown.

STEP 2

2 Build the ends and roof

Connect the ends and roof with all bolts still loose.

YOU NEED

- **1001** ×46
- **1002** ×46
- **1092** ×6
- **1022** ×2
- **4039** ×1
- **4040** ×1
- **4043** ×1
- **4048** ×1
- **4052** ×1
- **4056** ×3
- **4071** ×1
- **4072** ×1
- **4094** ×4

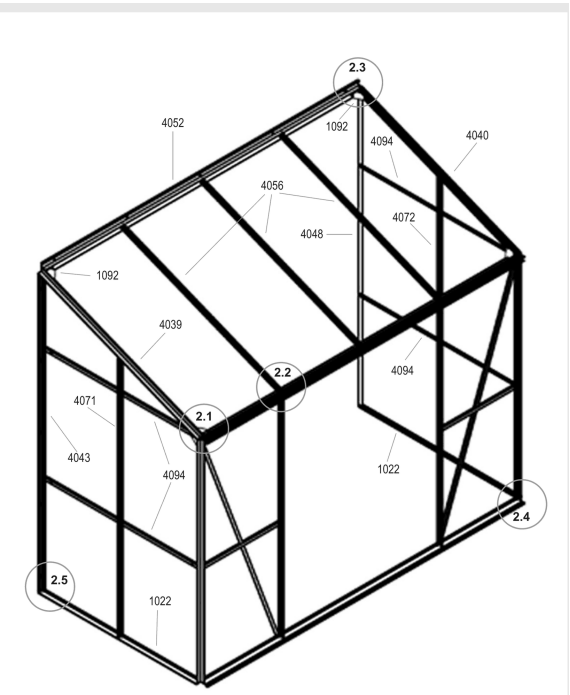

Vitavia drawing 2. The circled numbers match the pictures below.

INSTALLER TIP

Slide the extra bolts into each glazing bar before you fit the bar.

WATCH OUT

Do not miss the extra bolts: two per side glazing bar and one per roof glazing bar 4056. The roof bolts secure the vent in step 5.

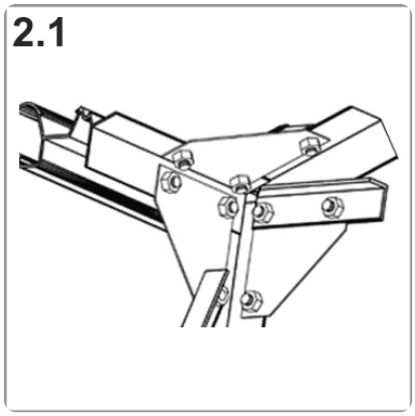

2.1

Connect gable end bars 4039 and 4040 to eaves door track 4029. Loosely fit corner plate 1092 above the eaves.

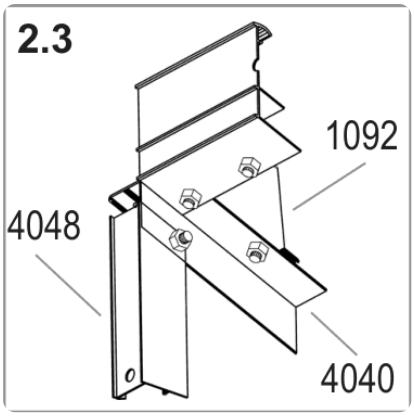

2.3

Connect the gable end bars to vertical wall bars 4043 and 4048 and ridge bar 4052. Loosely fit corner plate 1092 at the roof ridge.

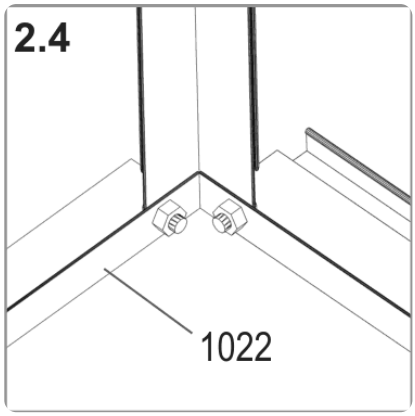

2.4

Bolt sill bar 1022 to bar 4035 at the front corner.

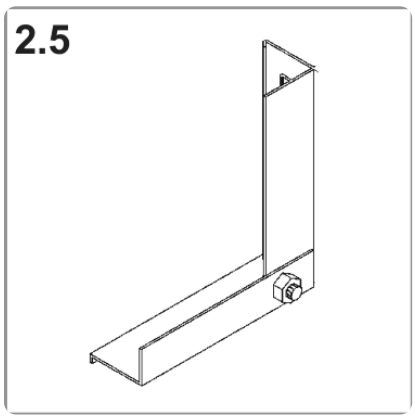

2.5

Bolt sill bar 1022 to the vertical wall bar at the wall end.

DO THIS NOW

Connect side glazing bars 4071 and 4072, with two extra bolts in each bar. Then connect side braces 4094.

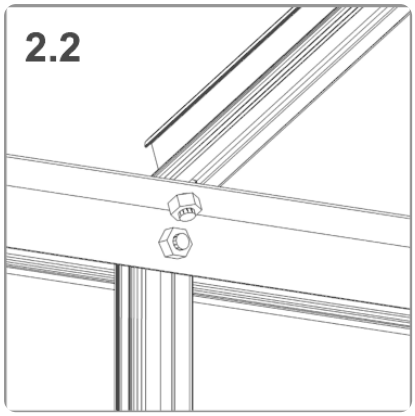

2.2

Connect the three roof glazing bars 4056 between eaves door track 4029 and ridge bar 4052. Insert one extra bolt into each roof glazing bar 4056 now for the roof vent.

STEP 3

3 Fix to the house wall

Work with two people to square the greenhouse on its base and fix it to the house wall.

YOU NEED



2002 ×15



2003 ×15

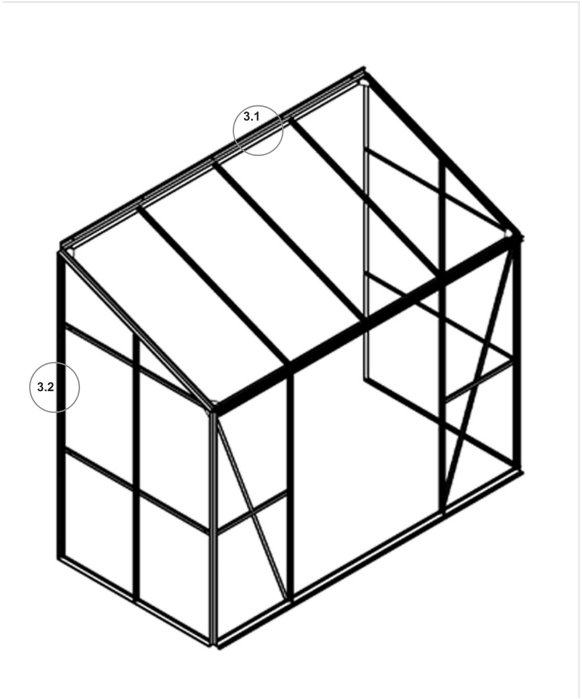

Vitavia drawing 3. The circled numbers match the pictures below.

INSTALLER TIP

Check that the sides are perfectly vertical before you mark the wall holes.

WATCH OUT

Screws 2002 and wall plugs 2003 are supplied. The drill is not included.

DO THIS NOW

Position and loosely connect the greenhouse on its prepared base or foundation; adjust until square, with both diagonals equal. Tighten all bolts without overtightening, and make sure the sides are perfectly vertical.

DO THIS NOW

Mark the wall through pre-drilled holes in bars 4043, 4048 and 4052, then lift the frame off the base. Drill 6 mm wall holes at the marks and insert supplied wall plugs 2003.

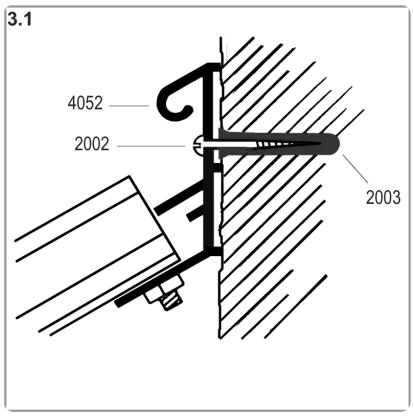

3.1 OUTSIDE VIEW

Put the frame back on the base. Screw ridge bar 4052 to the wall with screws 2002 and wall plugs 2003 as shown.

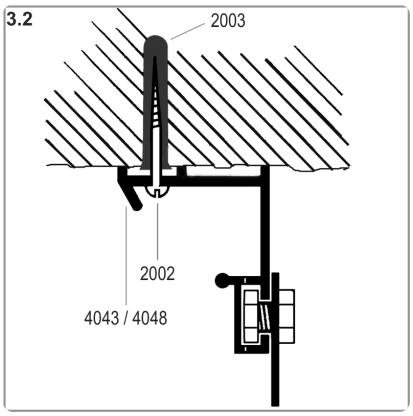

3.2 OUTSIDE VIEW

Screw vertical wall bars 4043 and 4048 to the wall with screws 2002 and wall plugs 2003 as shown.

DO THIS NOW

Finally, fix the frame to the base if you wish.

STEP 4L

4L Fit the left-hand door

Build and hang the first sliding door, with part 4099 on its inside edge.

YOU NEED

	**1001** ×3		**1002** ×3
	**1003** ×16		**1004** ×2
	**1007** ×2		**1009** ×2
	**1014** ×2		**1015** ×2
	**1059** ×1		**1060** ×1
	**1061** ×2		**1062** ×1
	**1111** ×1		**2005** ×1
	**2006** ×2		**3021** ×1
	**4059** ×1		**4099** ×1

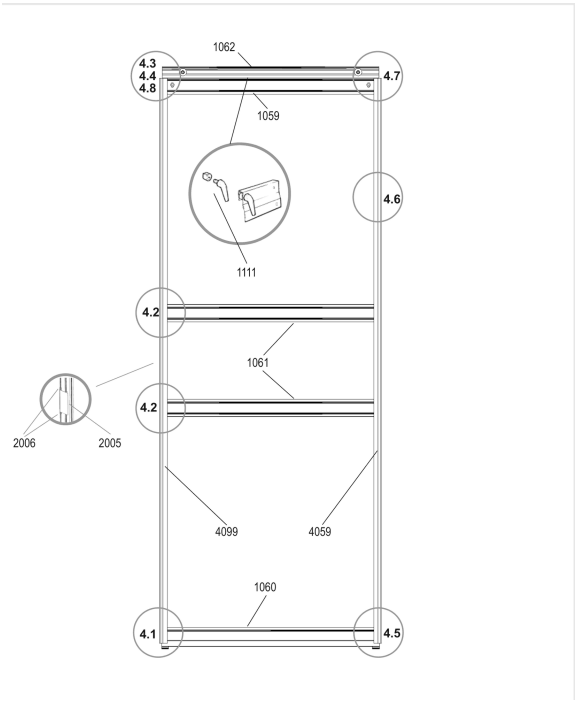

Vitavia drawing 4L. The circled numbers match the pictures below.

INSTALLER TIP

If the door binds or jumps the track, the frame is almost certainly not quite square. Check the frame before you force the door.

WATCH OUT

Never stand an assembled door on gliders 1014; this damages them. Use inside side bar 4099 on the left-hand door and 4098 on the right-hand door.

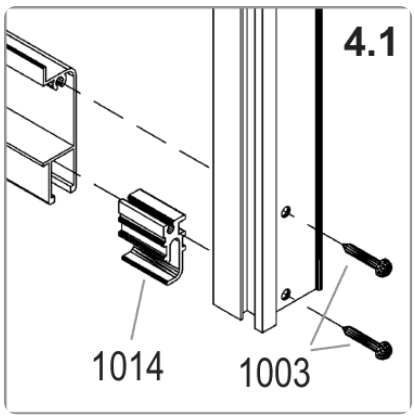

4.1

Push a door glider 1014 onto each end of door bar 1060. Screw the side bar to it with screws 1003.

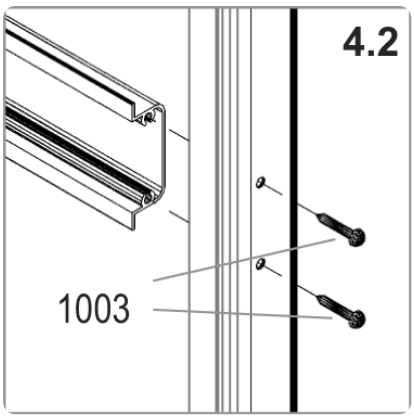

4.2

Screw the two bars 1061 to the side bars with screws 1003.

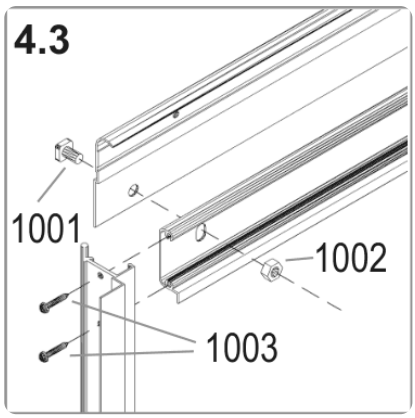

4.3

Bolt door bar 1062 to upper bar 1059 with bolt 1001 and nut 1002. Screw the side bar to it with screws 1003; use part 4099 as the inside side bar.

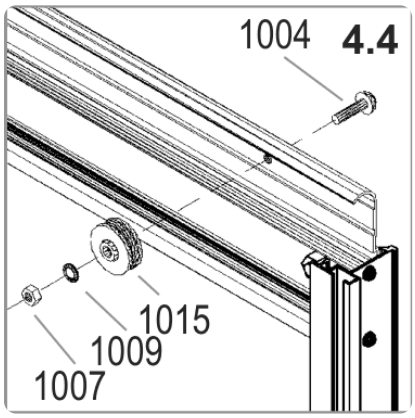

4.4

Fix the two door rollers 1015 to door bar 1062 with bolt 1004, washer 1009 and nut 1007.

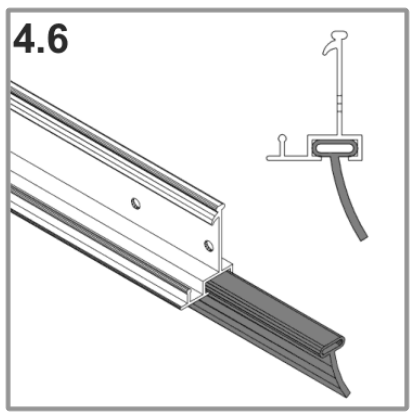

4.6 OUTSIDE VIEW

Slide door seal 3021 into outside side bar 4059. Cut the seal to length.

DO THIS NOW

Connect door fixer 1111 as shown in the round drawing within the door drawing.

DO THIS NOW

Fit part 2005 and the two parts 2006 to inside side bar 4099, as the small left-hand round drawing shows.

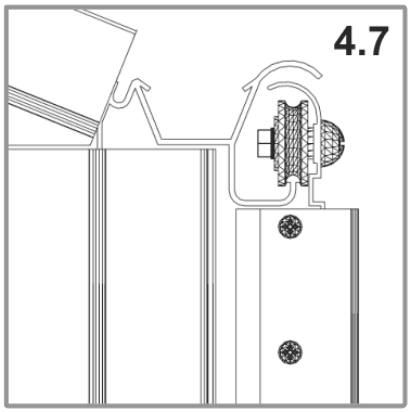

4.7 OUTSIDE VIEW

Lift the door and slide door rollers 1015 into door runner bar 4029.

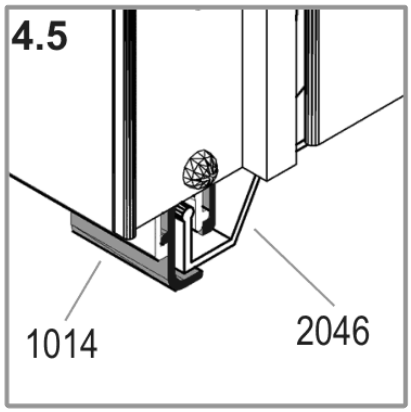

4.5 OUTSIDE VIEW

Make sure door gliders 1014 also run in the bottom track of bar 2046.

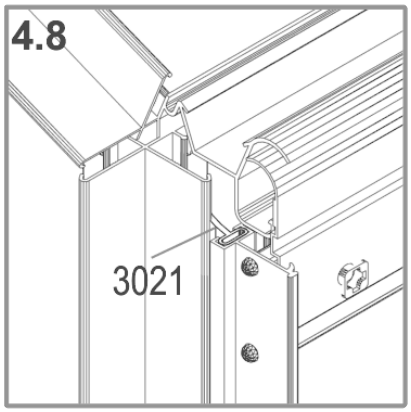

4.8 OUTSIDE VIEW

Position door seal 3021 at the top corner of the hung door as shown.

STEP 4R

4R Fit the right-hand door

Build and hang the second sliding door, with part 4098 on its inside edge.

YOU NEED

	**1001** ×3		**1002** ×3
	**1003** ×16		**1004** ×2
	1007 ×2		**1009** ×2
	**1014** ×2		**1015** ×2
	**1059** ×1		**1060** ×1
	**1061** ×2		**1062** ×1
	**1111** ×1		**3021** ×1
	**4059** ×1		**4098** ×1

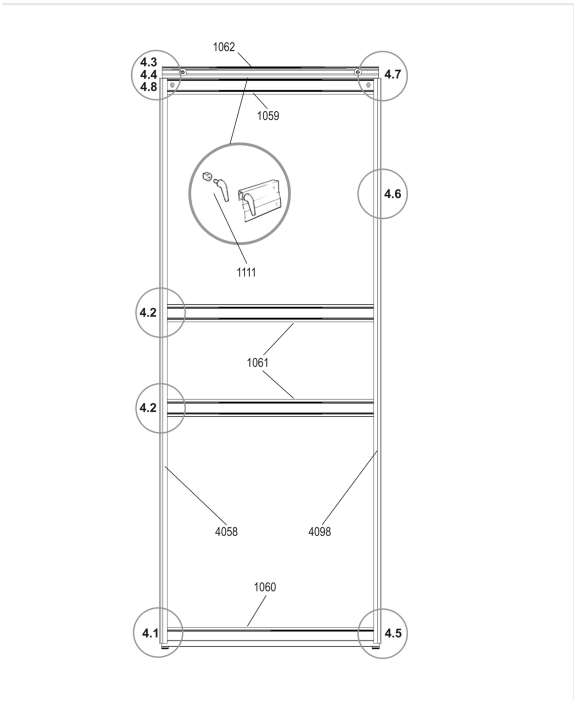

Vitavia drawing 4R. The circled numbers match the pictures below.

INSTALLER TIP

Hang the right-hand door the same way as the left-hand door. Then adjust both until they slide freely.

WATCH OUT

Never stand an assembled door on gliders 1014. This damages them.

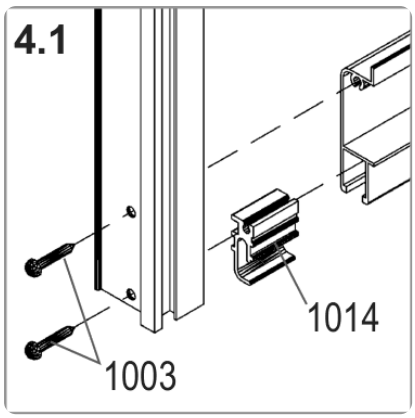

4.1

Push a door glider 1014 onto each end of door bar 1060. Screw the side bar to it with screws 1003.

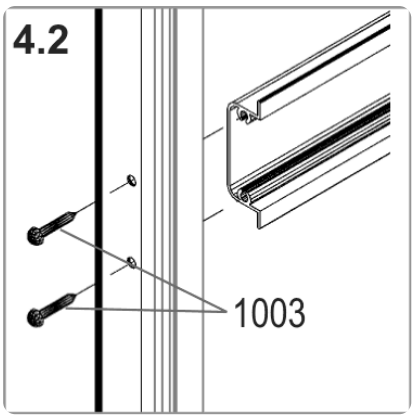

4.2

Screw the two bars 1061 to the side bars with screws 1003.

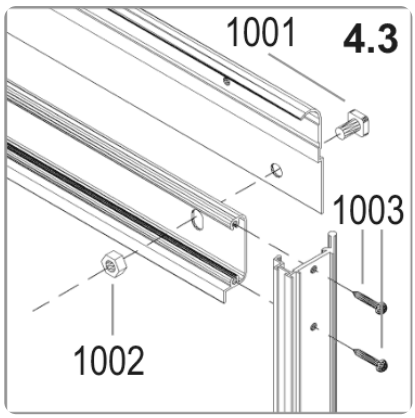

4.3

Bolt door bar 1062 to upper bar 1059 with bolt 1001 and nut 1002. Screw the side bar to it with screws 1003; use part 4098 as the inside side bar.

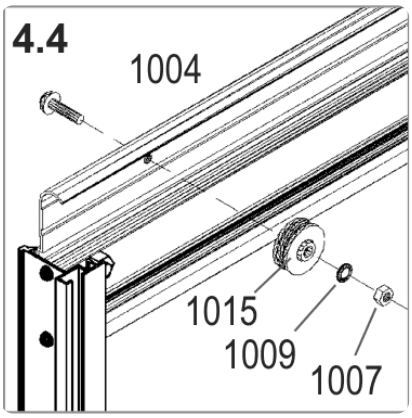

4.4

Fix the two door rollers 1015 to door bar 1062 with bolt 1004, washer 1009 and nut 1007.

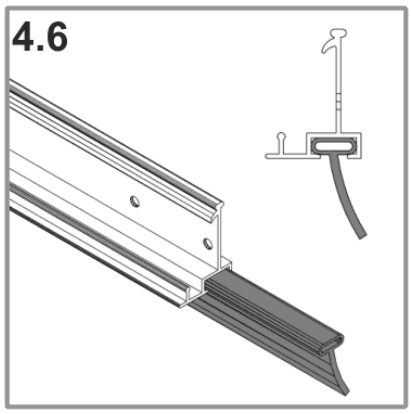

4.6 OUTSIDE VIEW

Slide door seal 3021 into outside side bar 4059. Cut the seal to length.

DO THIS NOW

Connect door fixer 1111 as shown in the round drawing within the door drawing.

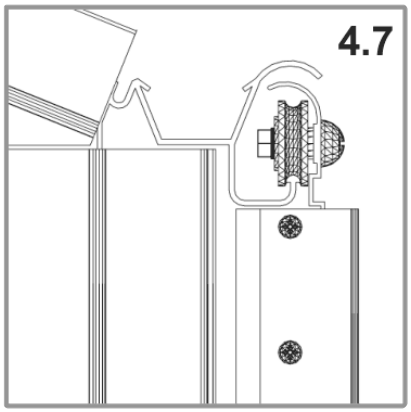

4.7 OUTSIDE VIEW

Lift the door and slide door rollers 1015 into door runner bar 4029.

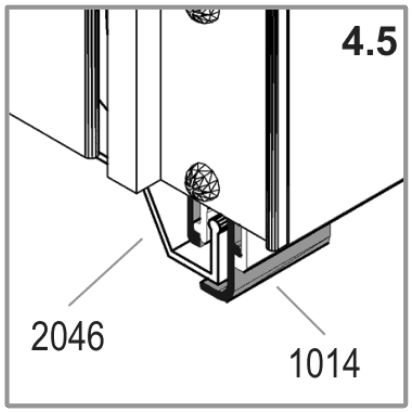

4.5 OUTSIDE VIEW

Make sure door gliders 1014 also run in the bottom track of bar 2046.

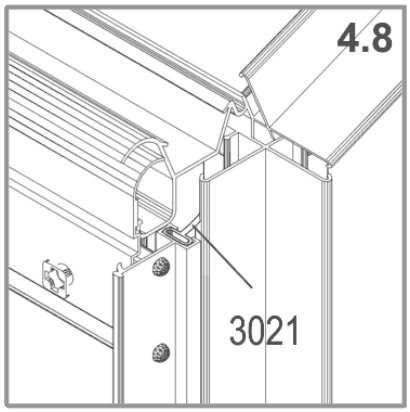

4.8 OUTSIDE VIEW

Position door seal 3021 at the top corner of the hung door as shown.

DO THIS NOW

Once both doors are in place, put a nut and bolt into each end of runner bar 4029 as stops. Adjust both doors until they slide freely.

STEP 5

5 Fit the roof vent

Build the roof vent, check it is square, then fit it to the roof.

YOU NEED

1001 ×4	**1002** ×5
1006 ×6	**1016** ×2
1019 ×1	**1063** ×1
1064 ×1	**1065** ×2
1066 ×1	**1067** ×1
2001 ×2	

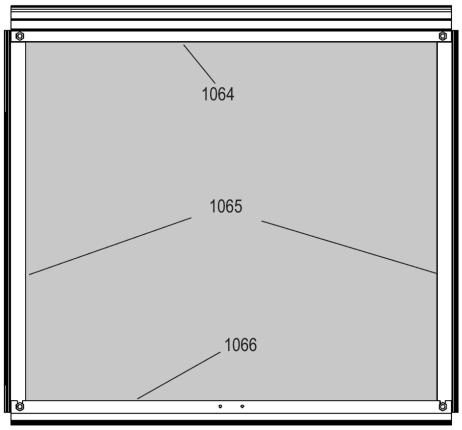

Vitavia drawing 5. The circled numbers match the pictures below.

INSTALLER TIP

Fit window sill 1063 flat edge up, with its grooved lip down towards the pane below. Recheck this bar if that pane will not sit snugly.

Watch: Build and fit the window

Scan with your phone camera. Vitavia video.

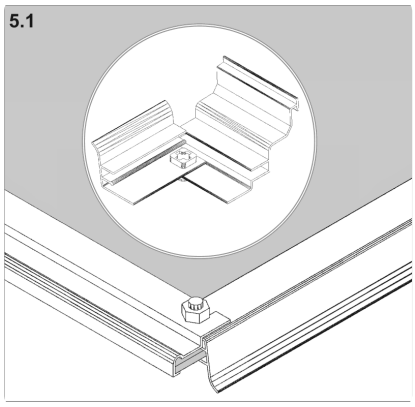

5.1

For a pane up to 4 mm thick, join side bars 1065 and top bar 1064 as shown.

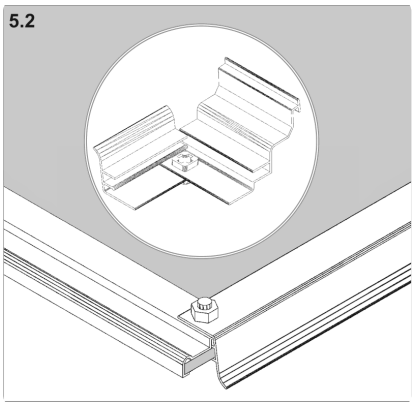

5.2

For a pane 4 mm or thicker, join side bars 1065 and top bar 1064 as shown here instead.

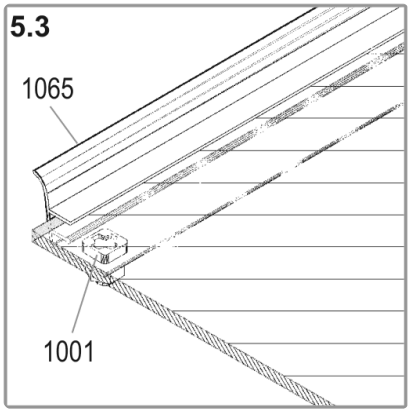

5.3 OUTSIDE VIEW

Put bolts 1001 for bottom bar 1066 into the prepared holes; slide the pane into side bar 1065 tracks. Fit bottom bar 1066 and check the vent is completely square before you tighten the bolts.

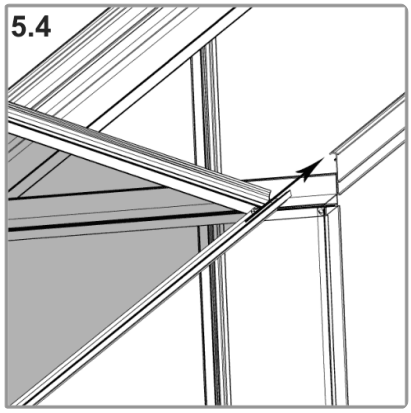

5.4 OUTSIDE VIEW

Hook the vent into the ridge bar from one end of the greenhouse.

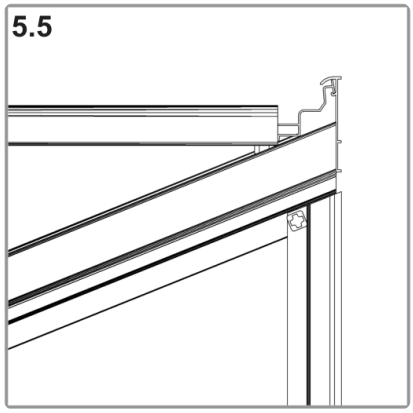

5.5 OUTSIDE VIEW

Hook vent top bar 1064 over ridge bar 4052 as shown.

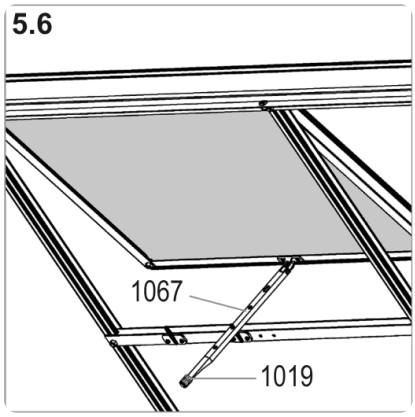

5.6 OUTSIDE VIEW

Slide the vent along to your chosen position. Push plastic cap 1019 over the end of window opener 1067.

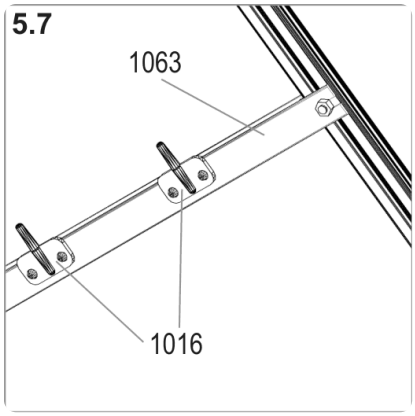

5.7 OUTSIDE VIEW

Fix window sill 1063 to the extra bolts in roof glazing bars 4056. Screw both window fixers 1016 onto window sill 1063 with screws 1006.

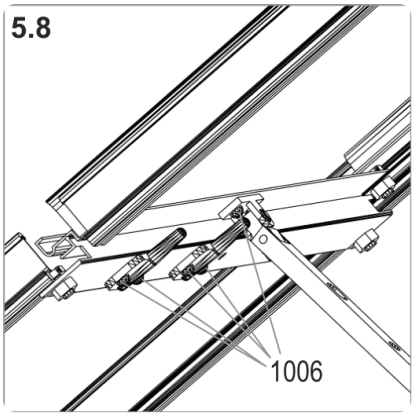

5.8 OUTSIDE VIEW

Screw window opener 1067 to vent bottom bar 1066 with screws 1006.

STEP 6

6 Fit the polycarbonate panes

Use the page's pane letters A to J and sizes to identify where each polycarbonate pane goes.

YOU NEED

1011 ×164	**1020** ×1
24674 ×4	**015140** ×4
015141 ×6	**015142** ×6

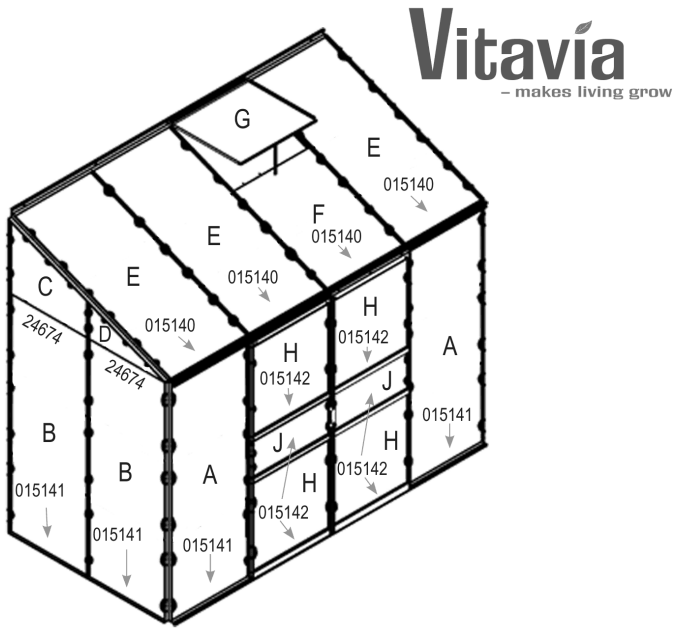

Vitavia drawing PC. The circled numbers match the pictures below.

INSTALLER TIP

Soak the whole reel of glazing seal in hot soapy water first. This softens the seal so it presses on more easily.

WATCH OUT

The panes are slightly short to allow for expansion. Leave the protective film on until each pane is in place, then remove it completely.

Watch: Fitting the glazing rubber

Scan with your phone camera. Vitavia video.

DO THIS NOW

Check that every pane and part listed on this page is included. Wear protective gloves; sharp edges and corners can cause injury.

DO THIS NOW

Face the UV-resistant side outside; identify it by the plastic film and edge printing. Remove the film completely after fitting; the panes are slightly short to allow expansion in warm weather.

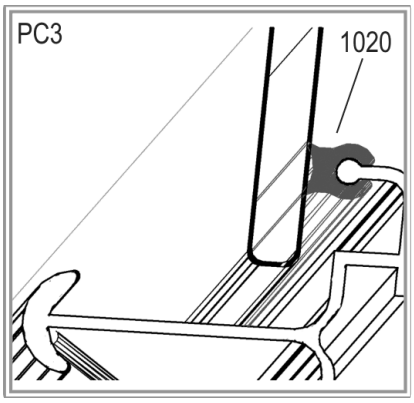

PC.3 OUTSIDE VIEW

Press glazing seals 1020 onto the aluminium profiles and cut them to length, as this drawing and PC.2 show. The seals come with the aluminium profiles.

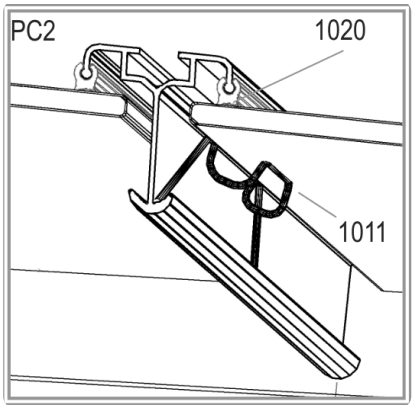

PC.2 OUTSIDE VIEW

Fix the panes in place with glazing spring clips 1011. Use the number of clips shown for each pane.

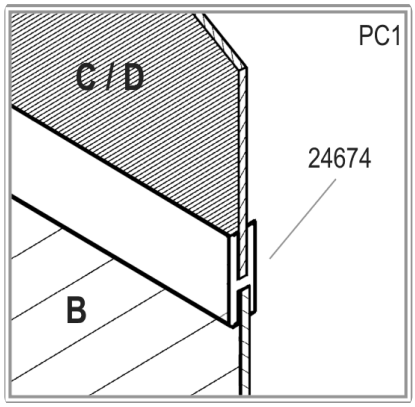

PC.1 OUTSIDE VIEW

Join the side panes with supplied H-plastic 24674, as shown between panes C or D and B.

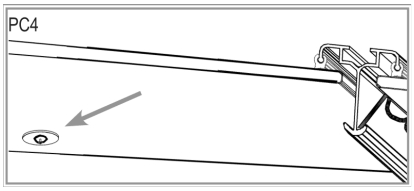

PC.4 OUTSIDE VIEW

For extra stability, drill a 2 mm hole through each pane's bottom centre and the bottom aluminium profile. Fit a washer and screw 015140, 015141 or 015142 as shown; the drill is not included.

Glass for your greenhouse

PANE	SIZE (MM)	IDA 3300
A	610 × 1650	2
B	610 × 1640	4
C	610 × 510 / 262	2
D	610 × 257 / 11	2
E	610 × 1350	3
F	610 × 806	1
G	600 × 544	1
H	610 × 610	4
J	610 × 248	2
	Total	**21**

Pane numbers match the glazing layout in the drawing above.

LAST JOBS

Finish and look after it

Finish

- [ ] Seal the edges with silicone if you wish. Silicone is not supplied.
- [ ] Stick the warning label inside the greenhouse.
- [ ] Stick the model label onto door bar 1062. You will need it to order spare parts.
- [ ] Keep this guide somewhere safe.

Looking after it

- [ ] Shut both doors and the roof vent in high winds.
- [ ] Clear or support the roof in heavy snow. Heat the greenhouse in winter.
- [ ] Wash the greenhouse occasionally with a mild detergent that does not attack aluminium or the glazing clips.
- [ ] Keep the upper and lower door tracks clean so grit does not build up.
- [ ] Add the greenhouse to your home insurance and check local building rules about where it can go.

Drawings reproduced from the Vitavia assembly instructions (Vitavia manual 007.01.0901 with polycarbonate glazing sheet 007PC.00.0811 (Ida 3300, polycarbonate)). Greenhouse Stores, greenhousestores.co.uk.