# Greenhouse Stores

ASSEMBLY GUIDE

# Ida 7800

## Vitavia greenhouse

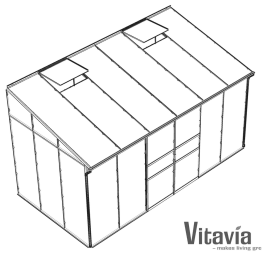


**12**
steps, base first

**2**
people needed

**1901 mm × 3788 mm**
base size (A × B)

Online version with every size: www.greenhousestores.co.uk/instructions/vitavia-ida-5200-7800/

## The build at a glance

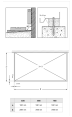

**0**
Prepare the base

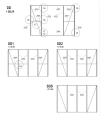

**1**
Build the front wall

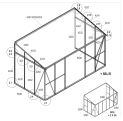

**2**
Build and connect the sides

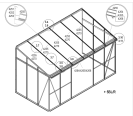

**3**
Fit roof bars and gutter

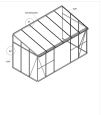

**4**
Fix to the house wall

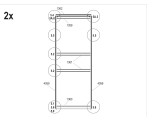


**5A**
Build two single doors

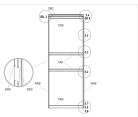

**5BL**
Build the left-hand double door

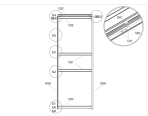

**5BR**
Build the right-hand double door

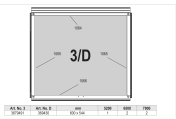


**6**
Build and fit roof vents

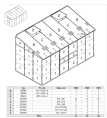

**7A**
Fit glass walls and roof

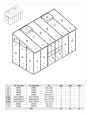

**7B**
Fit all polycarbonate glazing



**8**
Fit the down pipes

Drawings: Vitavia (Vitavia manual 050.01.1209 (Ida 5200, 6500 and 7800)). Words and layout: Greenhouse Stores, greenhousestores.co.uk. Keep this guide with your greenhouse.

READ THIS FIRST

# Before you start

## Six golden rules

1. Build frames loosely. Tighten only when the whole greenhouse stands square on its base, with both diagonals equal.
2. Never overtighten nuts 1002. The maximum is 3 Nm.
3. Choose your door layout before building the front wall. Follow only its drawings.
4. Fit two extra bolts in each roof glazing bar 4255 for the roof vent and strengtheners.
5. Check that the sides are perfectly vertical before fixing the greenhouse to the house wall.
6. Build with two people and always anchor your greenhouse.

## Get ready

- [ ] Read the whole guide once before you start.
- [ ] Gather flat/PH2 screwdrivers, 10 mm socket spanner/wrench, 10 mm combination spanner, knife, tape measure, spirit level. Set cordless drill adjustable torque low.
- [ ] Wear gloves, safety glasses, sturdy shoes and a hat. Aluminium edges are sharp. Clear up broken glass straight away.
- [ ] Open one bundle at a time and keep opened bundles apart. Mixed bundles are the main cause of lost-part searches.
- [ ] Check every part against the parts check pages. Contact Greenhouse Stores before you begin if anything is missing.
- [ ] Read single-frame drawings as views from inside the greenhouse. Read double-frame drawings as views from outside.
- [ ] Choose a sunny spot with as much shelter from wind as possible.

Read next: 10 common greenhouse installation mistakes (and how to avoid them)

 Single frame: inside view  Double frame: outside view

BEFORE STEP 1

# Parts check

Open one bundle at a time. Tick each part as you find it. The number in green is how many your Ida 7800 should have.

## Bars and profiles

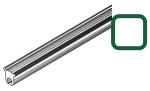

**1020**
Glazing seal (reel)
76000 mm **×1**



**1063**
Window sill
635 mm **×2**



**1064**
Vent top bar
602 mm **×2**

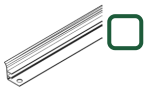

**1065**
Vent side bar
520 mm **×4**



**1066**
Vent bottom bar
602 mm **×2**



**1067**
Window opener
295 mm **×2**



**1092**
Corner plate
120 mm **×8**

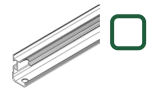

**1347**
Door runner bar
1257 mm **×2**

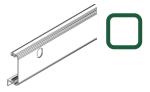

**1359**
Upper bar
621 mm **×2**

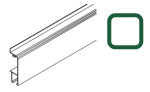

**1360**
Door bar
621 mm **×2**

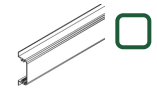

**1361**
621 mm **×4**

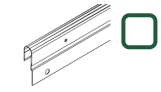

**1362**
Door bar
613 mm **×2**



**1413**
1470 mm **×2**

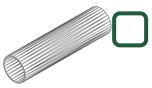

**1416**
126 mm **×2**

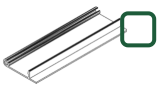

**2005**
100 mm **×1**



**2096**
Middle brace
619 mm **×2**



**2097**
Middle brace
619 mm **×2**

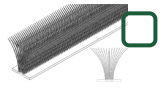

**3021**
Door seal
1800 mm **×4**



**3094**
1241 mm **×1**



**3097**
1241 mm **×1**

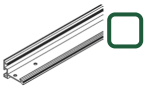

**4059**
Side bar
1630 mm **×4**

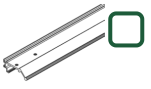

**4098**
Inside side bar
1630 mm **×1**

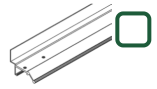

**4099**
Inside side bar
1630 mm **×1**

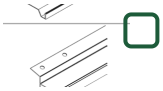

**4223**
3728 mm **×1**

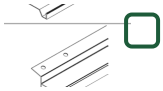

**4229**
Eave bar
3728 mm **×1**

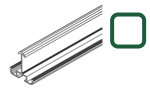

**4232**
Glazing bar
1670 mm **×9**

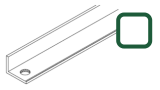

**4233**
Diagonal brace
1716.5 mm **×4**

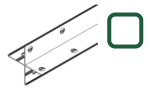

**4236**
1670 mm **×2**



**4237**
Roof corner bar
2035 mm **×1**



**4238**
Roof corner bar
2035 mm **×1**



**4241**
Glazing bar
314 mm **×1**



**4242**
Glazing bar
314 mm **×1**

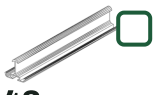

**4243**
Glazing bar
159 mm **×1**

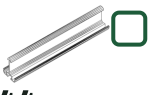

**4244**
Glazing bar
159 mm **×1**

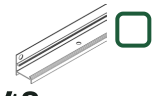

**4248**
Wall bar
2139.5 mm **×1**



**4249**
Wall bar
2139.5 mm **×1**

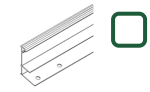

**4253**
Ridge bar
3728 mm **×1**

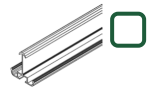

**4255**
Roof glazing bar
2013.5 mm **×5**

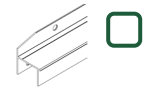

**4261**
Horizontal bar
1859.5 mm **×1**

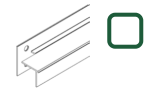

**4262**
Horizontal bar
1859.5 mm **×1**



**4266**
Gutter bar
3728 mm **×1**



**4270**
Roof strengthener
1936 mm **×5**



**4296**
638 mm **×1**



**5546**
Sill bar
1862 mm **×2**

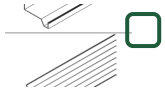

**6600**
Wind fixing strip
2013 mm **×12**

## Fixings and small parts



**1001**
Bolt
M6 × 12 **×150**



**1002**
Nut
M6 **×151**

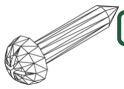

**1003**
Screw
3.5 × 16 **×32**



**1006**
Screw
3.5 × 6 **×16**



**1007**
Nut
M4 **×4**



**1009**
Washer
Ø8/4 **×4**



**1011**
Glazing spring clip
70 **×300**



**1012**
Glass retaining clip
11 **×44**



**1014**
Door glider
20 **×4**



**1015**
Door roller
Ø22 **×4**



**1019**
Plastic cap
15 **×2**

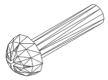

**1304**
Bolt
M4 × 18 **×4**



**1402**
36 **×6**



**1403**
20 **×4**

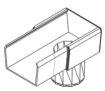

**1408**
75 **×2**



**1417**
Connection
20 **×2**



**1500**
Bolt
M6 × 5 **×4**



**1515**
Nut
M6 **×4**



**2001**
Corner bolt
M6 × 12 **×1**

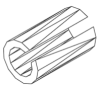

**2006**
10 **×2**

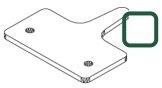

**2016**
Window fixer
40 **×4**



**2092**
37 **×4**

STEP 0

# 0 Prepare the base

Start with a square, level base at 90 degrees to the house wall.

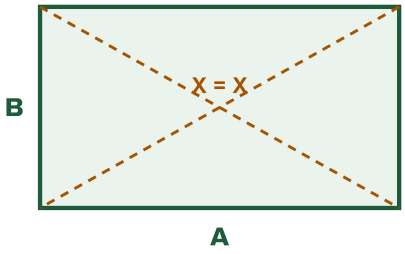


| | IDA 7800 |
|---|---|
| A | 1901 mm |
| B | 3788 mm |

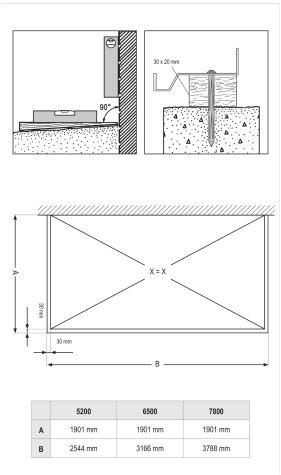


Vitavia drawing 0. The circled numbers match the pictures below.

**INSTALLER TIP**

Use ground spikes or anchor legs only in soil. On concrete or paving, bolt the base down with suitable fixings instead. Use one method, not both.

**WATCH OUT**

Check the base is square and level. Glass will not fit a frame that is out of square.

**0.1**

The base must be exactly square and level, at 90 degrees to the house wall; both diagonals must match. A zinc-coated steel base is sold as an accessory.

**0.2**

Only if you build your own stone or concrete foundation, use this page's A and B sizes; extend below frost level. Put treated timber at least 18 mm high and no more than 32 mm wide between foundation and aluminium frame; fix it to the foundation with 50 mm bolts (not supplied).

**0.3**

On a very windy, exposed site, drill through the greenhouse bottom profile and steel base. Bolt them together.

STEP 1

# 1 Build the front wall

Greenhouse Stores

Build the front wall flat on the ground and leave every bolt loose.

## YOU NEED

| | |
|---|---|
| **1092** ×2 | **2092** ×2 |
| **4223** ×1 | **4229** ×1 |
| **4233** ×2 | **4236** ×2 |

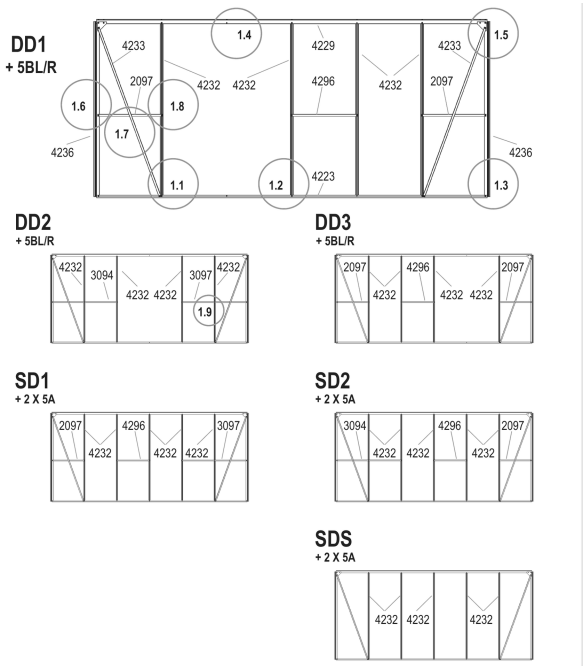


Vitavia drawing 1-7800. The circled numbers match the pictures below.

### INSTALLER TIP

Lay the parts on a blanket or lawn to protect the finish. Leave every nut loose for adjustment in step 4.

### WATCH OUT

Choose your door layout before you start. Changing it later means taking the front wall apart.

**Watch: Build the sides**

Scan with your phone camera. Vitavia video.

### DO THIS NOW

Decide door positions now: double doors span any two front fields except corners (DD; steps 5BL and 5BR). Two singles use side or front combinations (SD1, SD2), or one on each side (SDS); follow step 5A. Fit middle braces in fields beside both sides of each door opening (drawings 1.6 to 1.9).

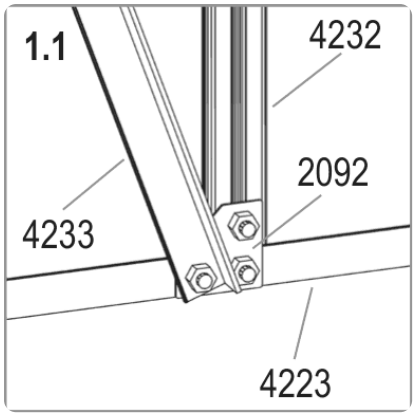


## 1.1

Join glazing bar 4232 and diagonal brace 4233 to your bottom bar (2046, 4222 or 4223) with plate 2092.

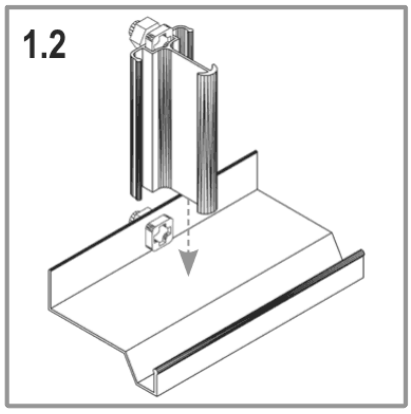


## 1.2 OUTSIDE VIEW

Slide a bolt into the bottom bar channel, following the arrow. Join glazing bar 4232 to the bottom bar as shown.

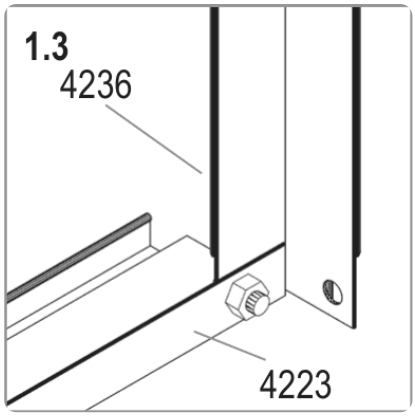


## 1.3

Bolt bar 4236 to each end of the bottom bar.

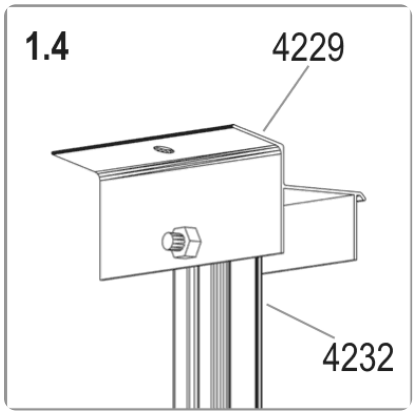


## 1.4

Bolt the top of glazing bar 4232 to your eave bar (4227, 4228 or 4229).

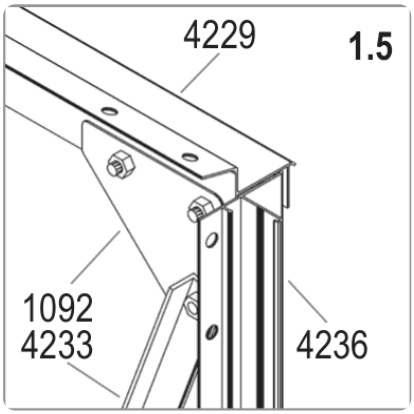


## 1.5

Loosely connect corner plate 1092 where the eave bar, diagonal brace 4233 and bar 4236 meet at each upper corner.

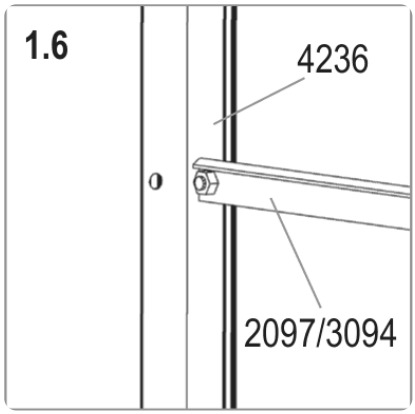


## 1.6

Bolt your middle brace (2097 or 3094) to bar 4236. Follow your layout drawing.

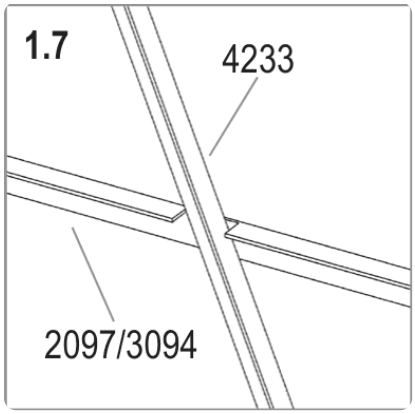


## 1.7

Position your middle brace (2097 or 3094) across diagonal brace 4233 as shown.

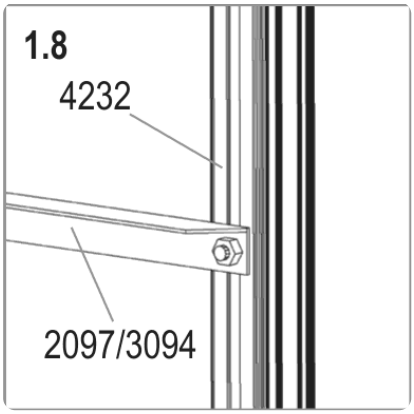


## 1.8

Bolt the other end of your middle brace (2097 or 3094) to glazing bar 4232.

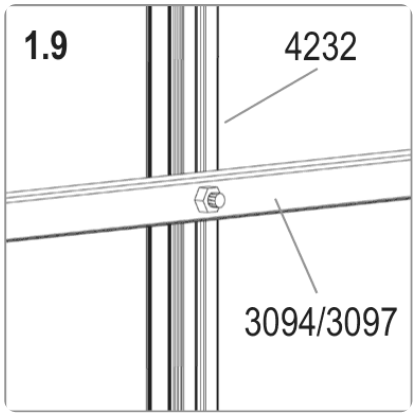


## 1.9

Where your layout uses brace 3094 or 3097, bolt it to glazing bar 4232 as shown.

**DO THIS NOW**

The number of some parts depends on your layout. DD1 and DD3: 26 bolts 1001 and 26 nuts 1002, 4 bars 4232, 2 braces 2097, 1 bar 4296. DD2: 26 bolts 1001 and 26 nuts 1002, 4 bars 4232, 1 brace 3094, 1 brace 3097. SD1: 29 bolts 1001 and 29 nuts 1002, 5 bars 4232, 1 brace 2097, 1 brace 3097, 1 bar 4296. SD2: 29 bolts 1001 and 29 nuts 1002, 5 bars 4232, 1 brace 2097, 1 brace 3094, 1 bar 4296. SDS: 22 bolts 1001 and 22 nuts 1002, 5 bars 4232.

STEP 2

# 2 Build and connect the sides

Greenhouse Stores

Build both sides and connect them to the front wall, with all bolts still loose.

## YOU NEED

| | |
|---|---|
| **1001** ×50 | **1002** ×50 |
| **1092** ×6 | **2092** ×2 |
| **4232** ×4 | **4233** ×2 |
| **4237** ×1 | **4238** ×1 |
| **4241** ×1 | **4242** ×1 |
| **4243** ×1 | **4244** ×1 |
| **4248** ×1 | **4249** ×1 |
| **4253** ×1 | **4261** ×1 |
| **4262** ×1 | **5546** ×2 |

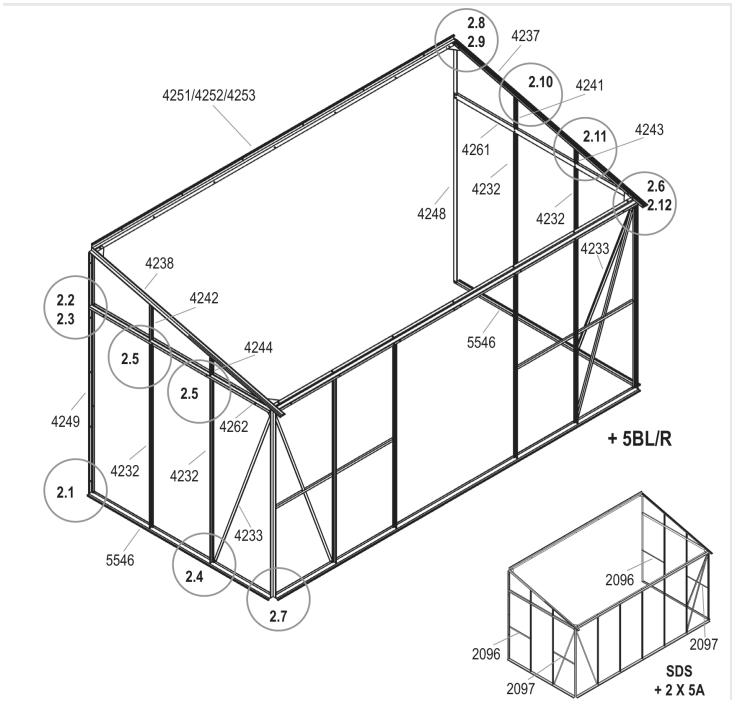


Vitavia drawing 2. The circled numbers match the pictures below.

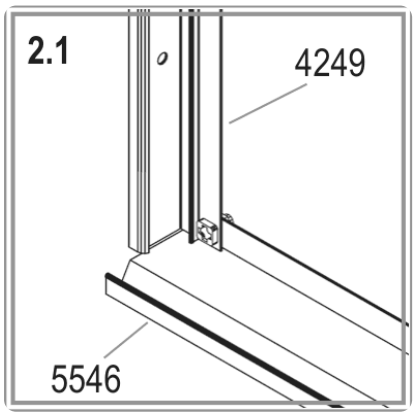


### 2.1 OUTSIDE VIEW

Bolt wall bar 4249 to sill bar 5546 as shown. Use wall bar 4248 on the other side.

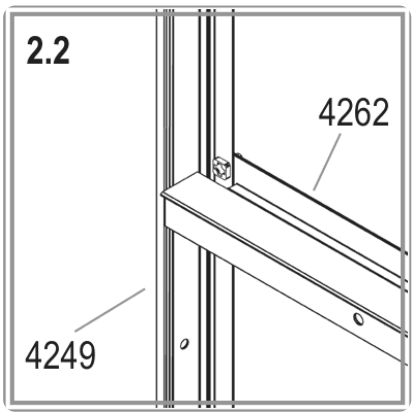


### 2.2 OUTSIDE VIEW

Bolt horizontal bar 4262 to wall bar 4249 as shown. Use horizontal bar 4261 on the other side.

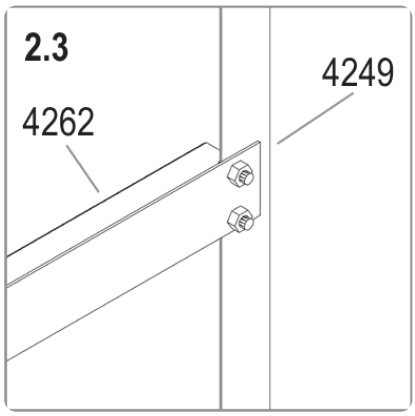


### 2.3

Bolt horizontal bar 4262 to wall bar 4249 with two bolts as shown.

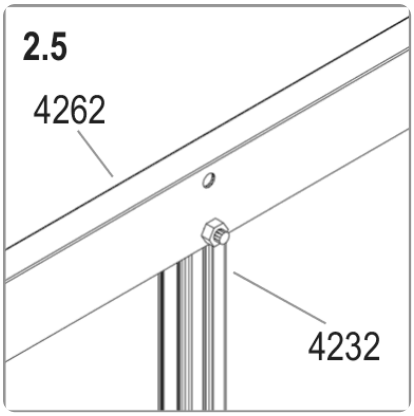


## 2.5

Loosely connect glazing bars 4232 between the sill bar and horizontal bar as shown.

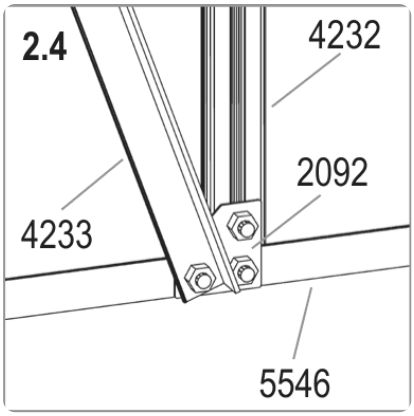


## 2.4

Loosely connect both sides to the front wall with diagonal braces 4233. At the bottom, join brace 4233 and glazing bar 4232 to sill bar 5546 with plate 2092.

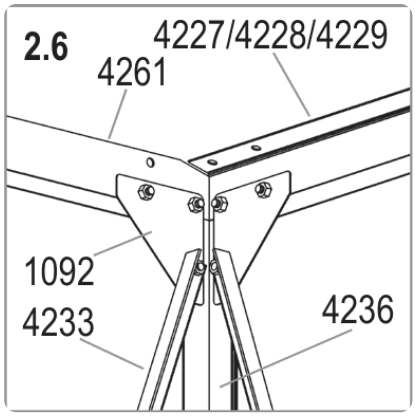


## 2.6

Join horizontal bar 4261, your eave bar (4227, 4228 or 4229), brace 4233 and bar 4236 with corner plate 1092.

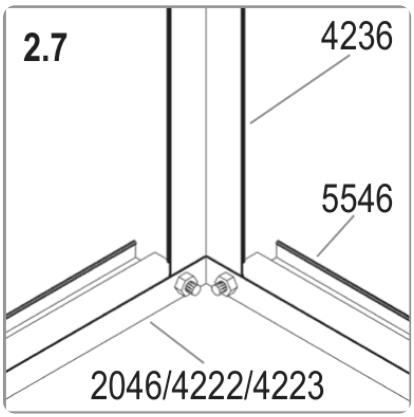


## 2.7

Bolt sill bar 5546 to your bottom bar (2046, 4222 or 4223) and bar 4236 at the bottom front corner.

**DO THIS NOW**

For SDS only, fit two middle braces 2096 and two middle braces 2097 in the sides as shown. Use 58 bolts 1001 and 58 nuts 1002 instead of 50 of each.

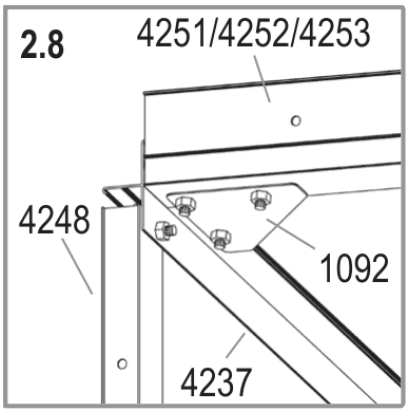


## 2.8 OUTSIDE VIEW

Loosely connect roof corner bar 4237 between wall bar 4248 and the ridge bar with corner plate 1092. Repeat with roof corner bar 4238 on the other side.

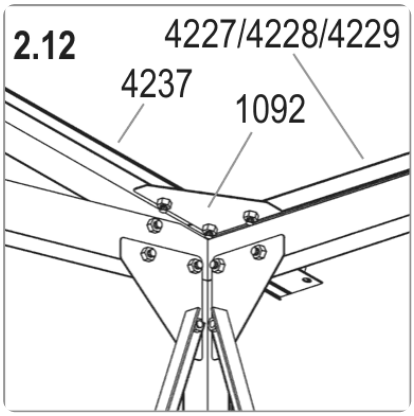


## 2.12

Connect roof corner bar 4237 to the eave bar with corner plate 1092 at the front.

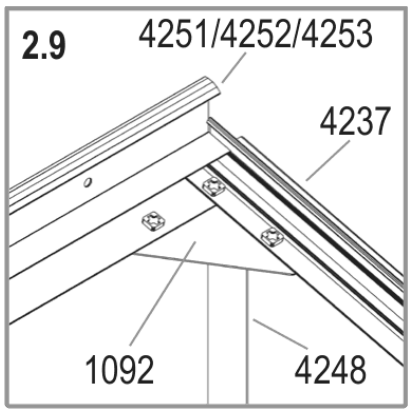


## 2.9 OUTSIDE VIEW

Loosely connect your ridge bar (4251, 4252 or 4253) between the roof corner bars with corner plates 1092.

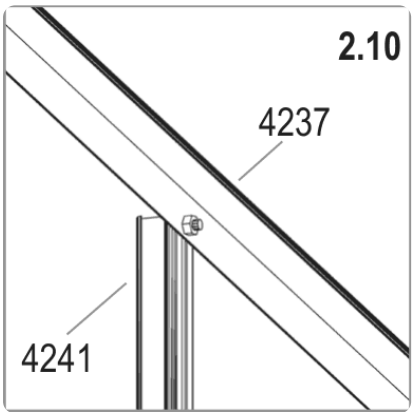


## 2.10

Loosely connect glazing bar 4241 to roof corner bar 4237 as shown.

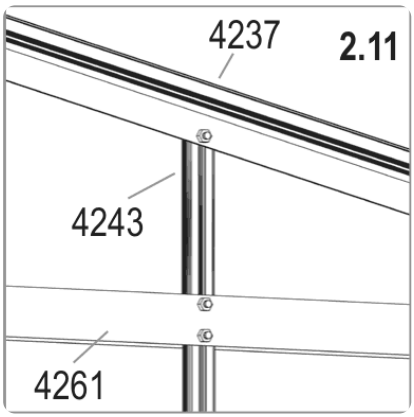


## 2.11

Loosely connect glazing bar 4243 between horizontal bar 4261 and roof corner bar 4237. Use glazing bars 4242 and 4244 on the other side.

STEP 3

# 3 Fit roof bars and gutter

Fit the roof glazing bars, strengtheners and gutter, with all bolts still loose.

## YOU NEED

- **1001** ×27
- **1002** ×17
- **4255** ×5
- **4266** ×1
- **4270** ×5

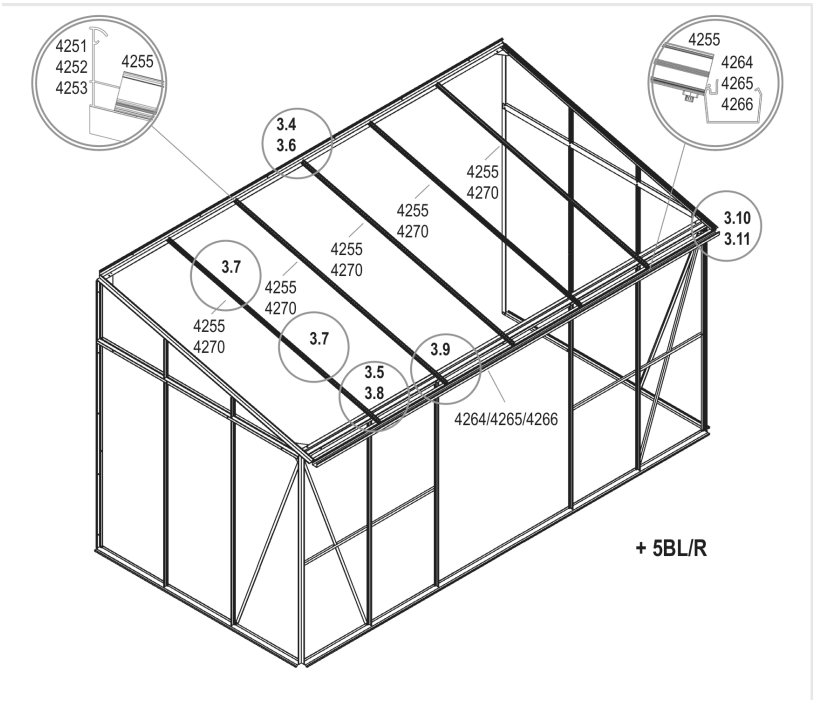


Vitavia drawing 3. The circled numbers match the pictures below.

**INSTALLER TIP**

Count the extra bolts before fitting the gutter bar. Each roof glazing bar 4255 must have two.

**WATCH OUT**

Do not miss the extra bolts. Each roof glazing bar 4255 needs two, and you cannot add them later.

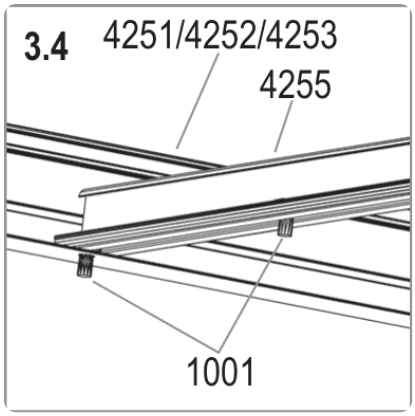


## 3.4

Place roof glazing bars 4255 on your ridge bar (4251, 4252 or 4253). Seat each bar against the ridge bar lip.

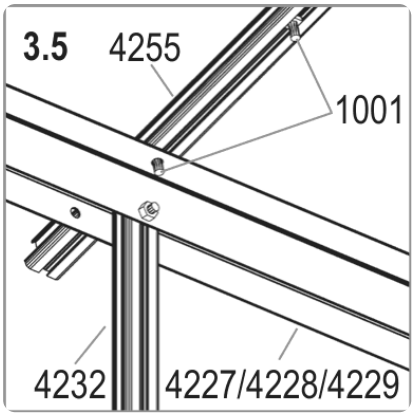


## 3.5

Rest each roof glazing bar 4255 over your eave bar (4227, 4228 or 4229). Insert two extra bolts 1001 into each bar's channel now for the roof vent and strengtheners.

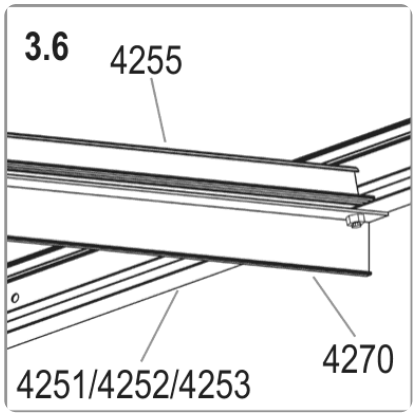


## 3.6

Loosely connect roof strengthener 4270 underneath each roof glazing bar 4255 at the ridge end as shown.

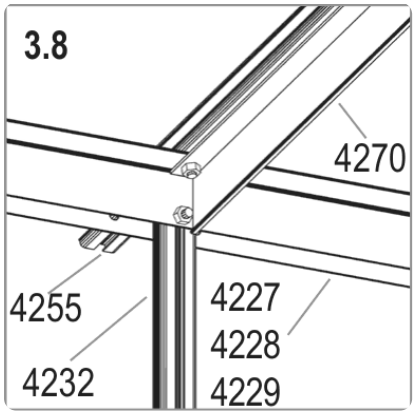


## 3.8

Fix the lower end of strengthener 4270 underneath bar 4255 at the eave as shown.

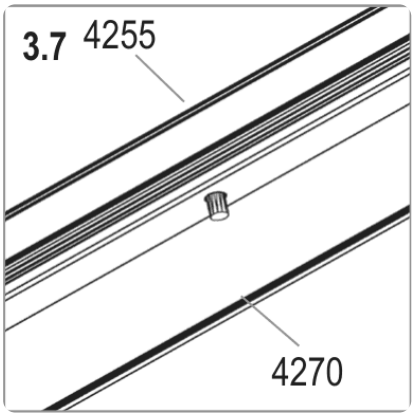


## 3.7

Put the extra bolts in bar 4255 through the prepared holes in strengthener 4270.

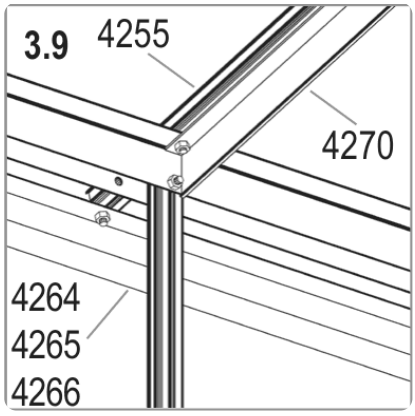


## 3.9

Loosely connect your gutter bar (4264, 4265 or 4266) to roof glazing bars 4255.

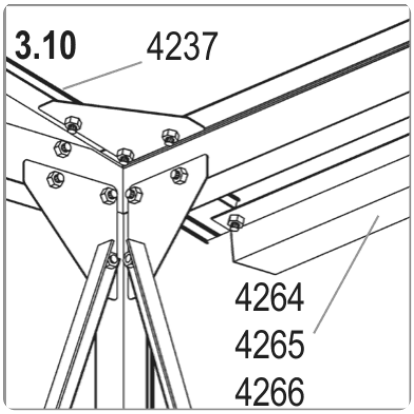


## 3.10

Connect the gutter bar to roof corner bar 4237 at the corner as shown.

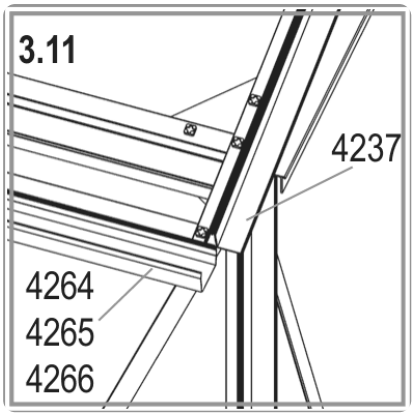


## 3.11 OUTSIDE VIEW

Connect the gutter bar to both roof corner bars 4237 and 4238 as shown.

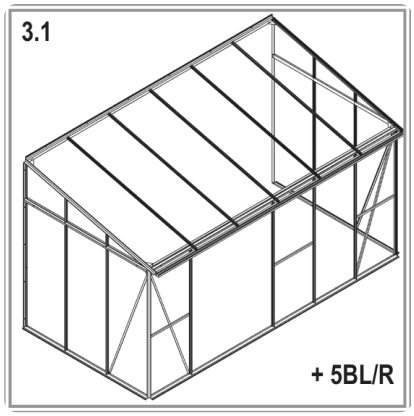


## 3.1 OUTSIDE VIEW

Compare your frame with this drawing if you chose the double-door position shown, using steps 5BL and 5BR.

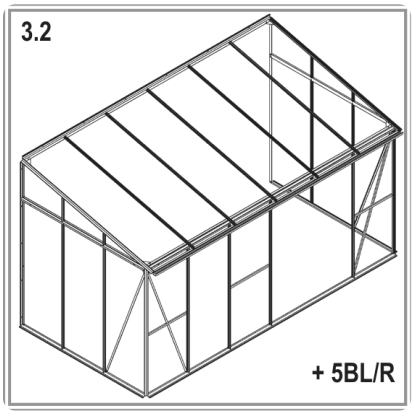


## 3.2 OUTSIDE VIEW

Compare your frame with this drawing if you chose this alternative double-door position.

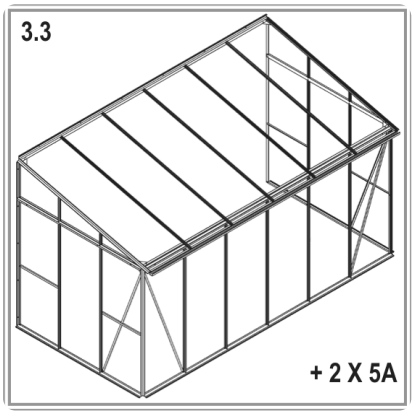


## 3.3 OUTSIDE VIEW

Compare your frame with this drawing if you chose two single doors, using step 5A.

STEP 4

# 4 Fix to the house wall

Work with two people to square the frame and fix it to the house wall.

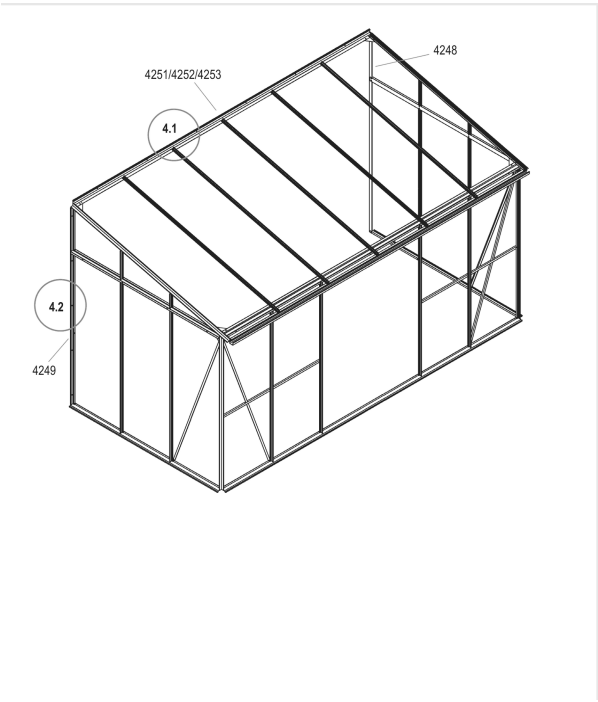


Vitavia drawing 4. The circled numbers match the pictures below.

**INSTALLER TIP**

Check the sides are perfectly vertical before you mark the wall holes.

**WATCH OUT**

The wall plugs, screws and drill are not included.

**DO THIS NOW**

Loosely connect the greenhouse to the prepared base or foundation, then adjust it until completely square. Tighten all bolts to a maximum of 3 Nm and check the sides are perfectly vertical.

**DO THIS NOW**

Mark the pre-drilled holes in wall bars 4248 and 4249 and your ridge bar (4251, 4252 or 4253). Lift the frame off the base, drill the marked wall holes and insert wall plugs.

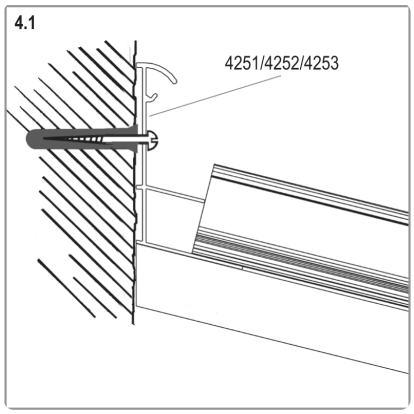


## 4.1 OUTSIDE VIEW

Put the frame back on the base. Screw the ridge bar to the wall as shown.

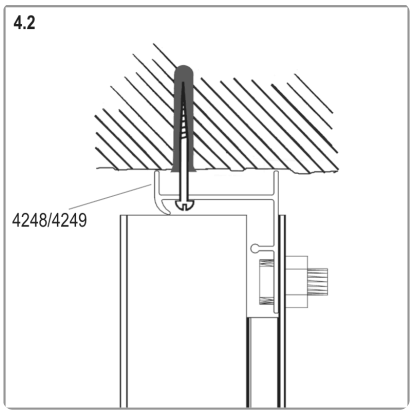


## 4.2 OUTSIDE VIEW

Screw wall bars 4248 and 4249 to the wall as shown.

**DO THIS NOW**

Fix the frame to the base.

STEP 5A

# 5A Build two single doors

Follow this step only for single-door layouts SD1, SD2 or SDS.

## YOU NEED

| | | | |
|---|---|---|---|
|  | **1001** ×14 |  | **1002** ×14 |
|  | **1003** ×32 |  | **1007** ×4 |
|  | **1009** ×4 |  | **1014** ×4 |
|  | **1015** ×4 |  | **1304** ×4 |
|  | **1347** ×2 |  | **1359** ×2 |
|  | **1360** ×2 |  | **1361** ×4 |
|  | **1362** ×2 |  | **1500** ×4 |
|  | **1515** ×4 |  | **3021** ×4 |
|  | **4059** ×4 | | |

2x

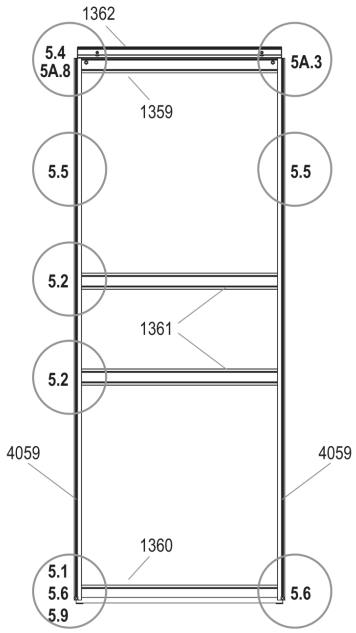


Vitavia drawing 5A. The circled numbers match the pictures below.

**INSTALLER TIP**

If a door binds or jumps the track, recheck the frame for square before forcing it.

**WATCH OUT**

Never stand an assembled door on its gliders 1014. This damages them.

**DO THIS NOW**

Build both single doors the same way. For a double door, skip this step and go to step 5BL.

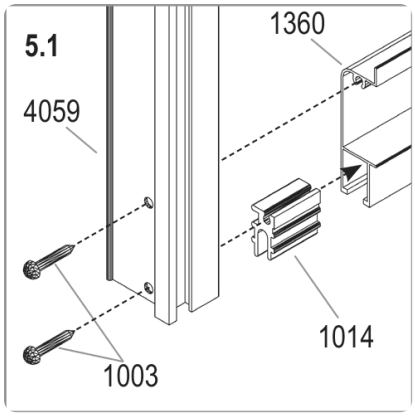


## 5.1

Push door glider 1014 onto each end of door bar 1360. Screw side bar 4059 to it with screws 1003.

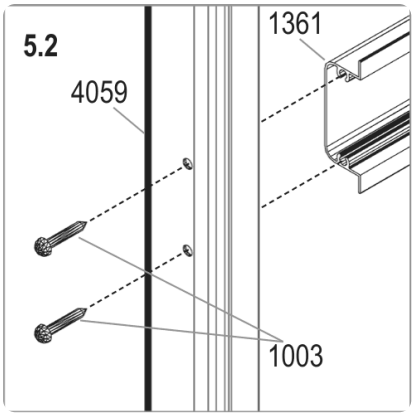


## 5.2

Screw the two bars 1361 to side bars 4059 with screws 1003.

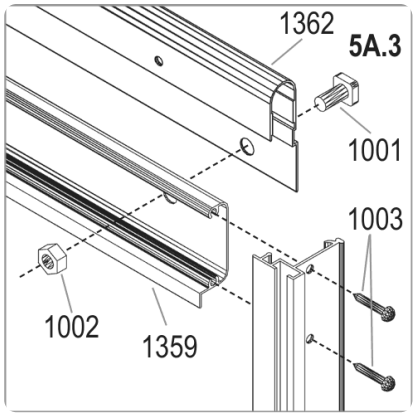


## 5A.3

Bolt door bar 1362 to upper bar 1359 with bolt 1001 and nut 1002. Screw the side bar to it with screws 1003.

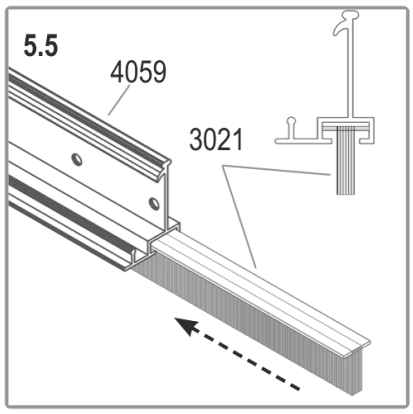


## 5.5 OUTSIDE VIEW

Slide door seal 3021 into each side bar 4059.

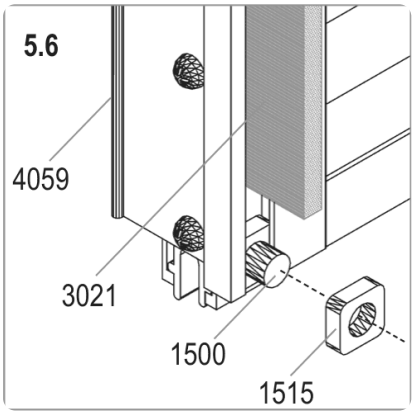


## 5.6

Slide bolt 1500 into the bottom of the door seal 3021 channel and secure it with nut 1515. Cut door seals 3021 to length.

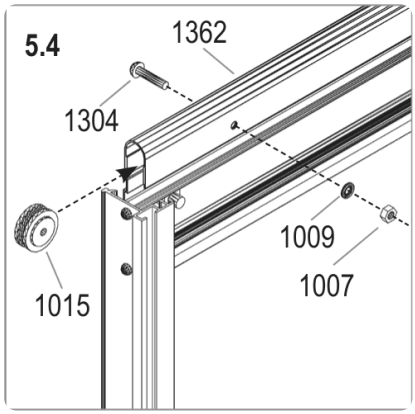


## 5.4

Fix the two door rollers 1015 to door bar 1362 with bolt 1304, washer 1009 and nut 1007.

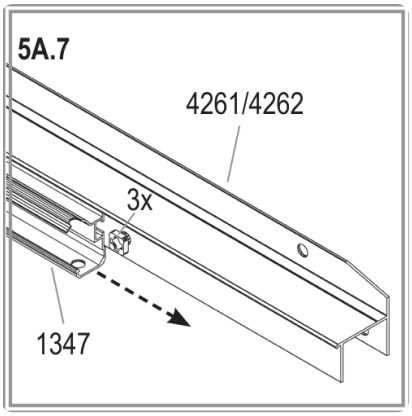


## 5A.7 OUTSIDE VIEW

Connect door runner bar 1347 to horizontal bar 4261 or 4262. For a front single door, connect it to your eave bar (4227, 4228 or 4229) instead.

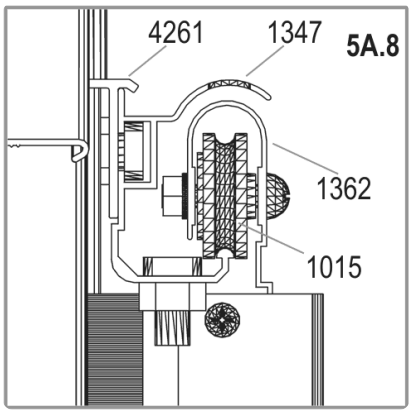


## 5A.8 OUTSIDE VIEW

Lift the door and slide door rollers 1015 into door runner bar 1347.

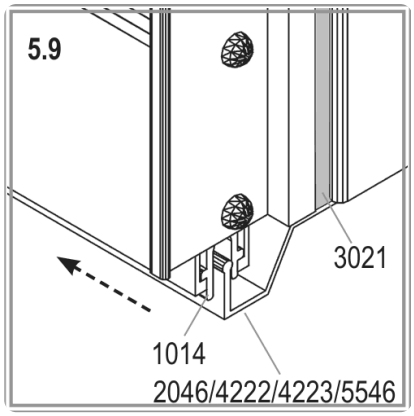


## 5.9 OUTSIDE VIEW

Check that door gliders 1014 also run in the bottom track.

**DO THIS NOW**

Once each door is in place, fit a nut and bolt into both ends of door runner bar 1347. Adjust the door until it slides freely.

5BL

STEP 5BL

Greenhouse Stores

# Build the left-hand double door

Follow this step for the left-hand door of your chosen double-door layout.

## YOU NEED

| | |
|---|---|
|  **1001** ×6 |  **1002** ×6 |
|  **1003** ×16 |  **1007** ×2 |
|  **1009** ×2 |  **1014** ×2 |
|  **1015** ×2 |  **1304** ×2 |
|  **1347** ×1 |  **1359** ×1 |
|  **1360** ×1 |  **1361** ×2 |
|  **1362** ×1 |  **1500** ×1 |
|  **1515** ×1 |  **2005** ×1 |
|  **2006** ×2 |  **3021** ×1 |
|  **4059** ×1 |  **4098** ×1 |

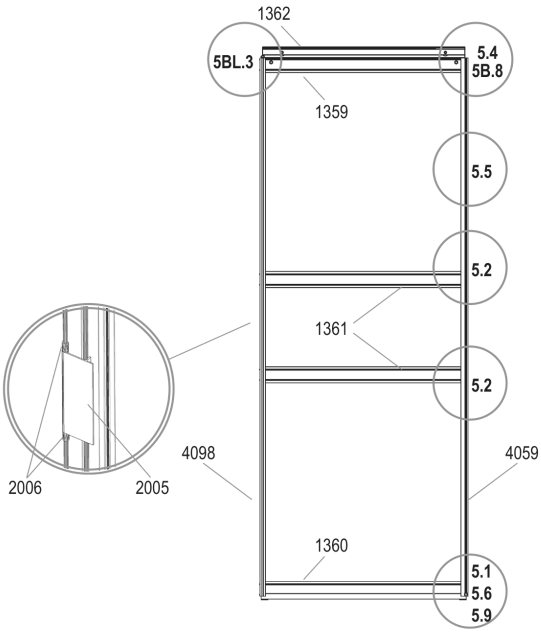


Vitavia drawing 5BL. The circled numbers match the pictures below.

**INSTALLER TIP**

If a door binds or jumps the track, recheck the frame for square before forcing it.

**WATCH OUT**

Never stand an assembled door on gliders 1014, as this damages them. Fit inside side bar 4098 on the left-hand door and 4099 on the right-hand door.

**DO THIS NOW**

Skip steps 5BL and 5BR if you chose two single doors.

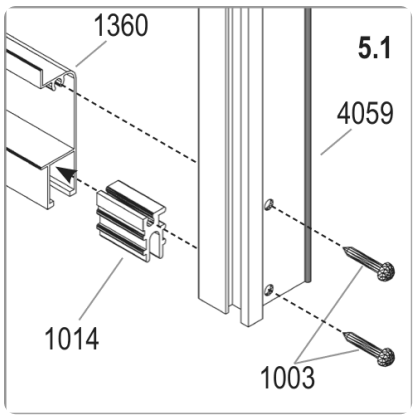


## 5.1

Push door glider 1014 onto each end of door bar 1360. Screw side bar 4059 to it with screws 1003.

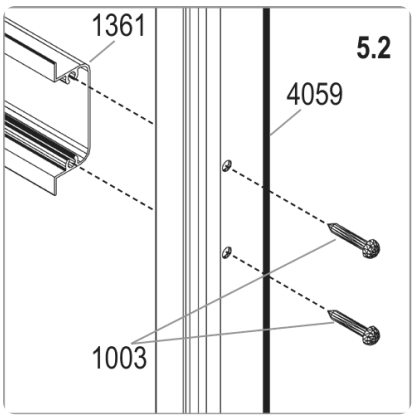


## 5.2

Screw the two bars 1361 to side bars 4059 with screws 1003.

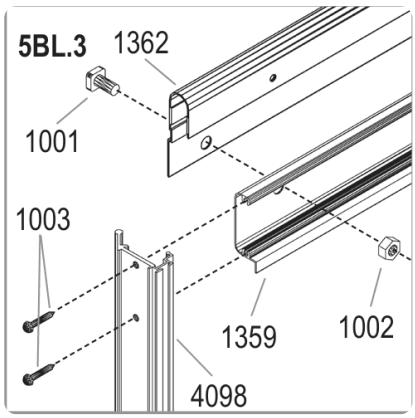


## 5BL.3

Bolt door bar 1362 to upper bar 1359 with bolt 1001 and nut 1002. Screw inside side bar 4098 onto the left-hand door with screws 1003.

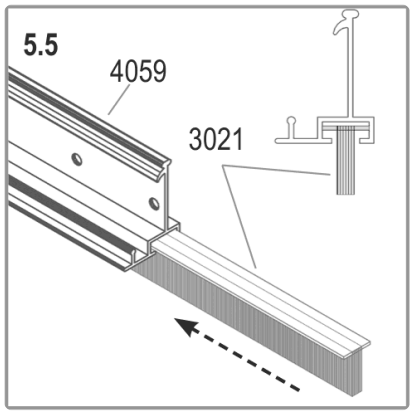


## 5.5 OUTSIDE VIEW

Slide door seal 3021 into side bar 4059.

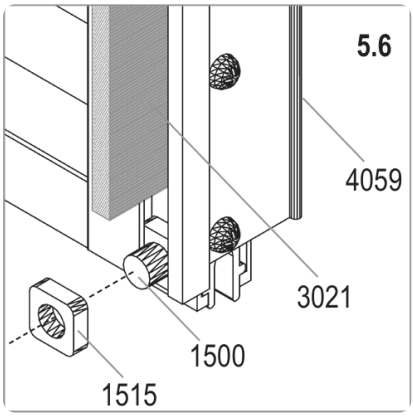


## 5.6

Slide bolt 1500 into the bottom of the door seal 3021 channel and secure it with nut 1515. Cut door seals 3021 to length.

**DO THIS NOW**

Fit part 2005 and the two parts 2006 to inside side bar 4098 as shown in the round drawing.

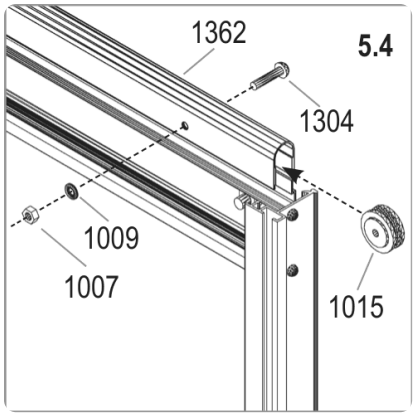


## 5.4

Fix the two door rollers 1015 to door bar 1362 with bolt 1304, washer 1009 and nut 1007.

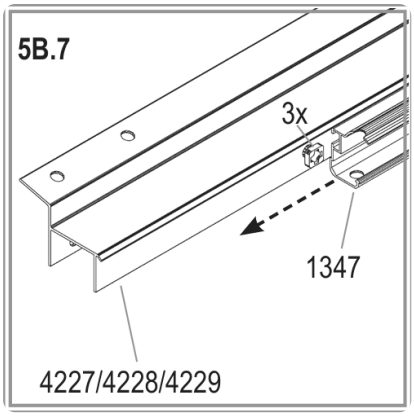


## 5B.7 OUTSIDE VIEW

Connect door runner bar 1347 to your eave bar (4227, 4228 or 4229).

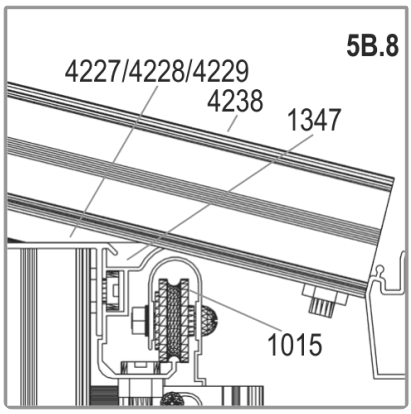


## 5B.8 OUTSIDE VIEW

Lift the door and slide door rollers 1015 into door runner bar 1347.

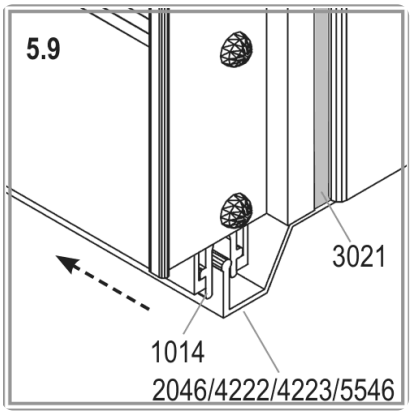


## 5.9 OUTSIDE VIEW

Check that door gliders 1014 also run in the bottom track.

5BR

STEP 5BR

Greenhouse Stores

# Build the right-hand double door

Build and hang the right-hand door, then fit the stops and adjust both doors.

## YOU NEED

| | | | |
|---|---|---|---|
|  | **1001** ×6 |  | **1002** ×7 |
|  | **1003** ×16 |  | **1007** ×2 |
|  | **1009** ×2 |  | **1014** ×2 |
|  | **1015** ×2 |  | **1304** ×2 |
|  | **1347** ×1 |  | **1359** ×1 |
|  | **1360** ×1 |  | **1361** ×2 |
|  | **1362** ×1 |  | **1500** ×1 |
|  | **1515** ×1 |  | **2001** ×1 |
|  | **3021** ×1 |  | **4059** ×1 |
|  | **4099** ×1 | | |

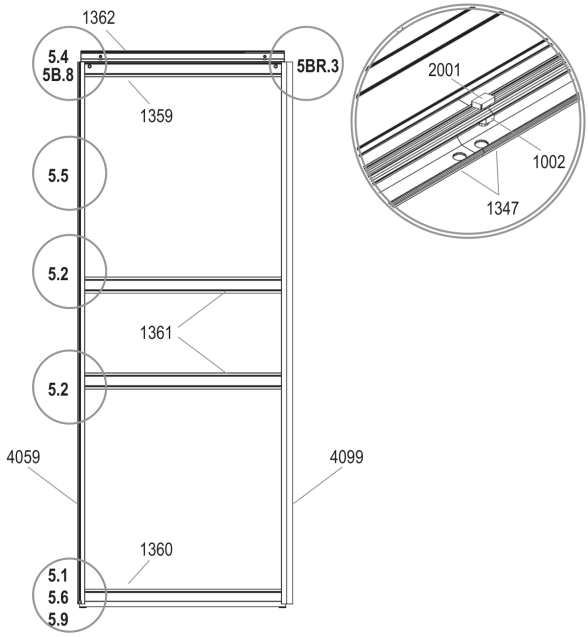


Vitavia drawing 5BR. The circled numbers match the pictures below.

**INSTALLER TIP**

Hang the right-hand door the same way as the left-hand door. Adjust both until they slide freely.

**WATCH OUT**

Never stand an assembled door on its gliders 1014. This damages them.

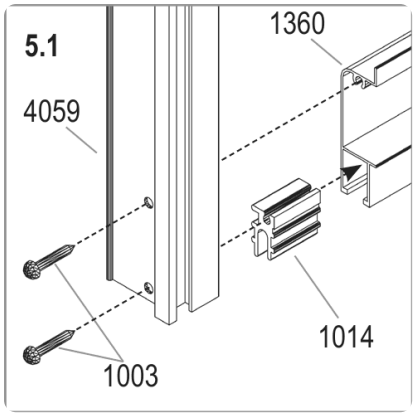


## 5.1

Push door glider 1014 onto each end of door bar 1360. Screw side bar 4059 to it with screws 1003.

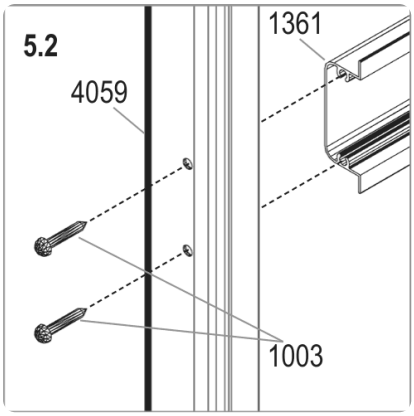


## 5.2

Screw the two bars 1361 to side bars 4059 with screws 1003.

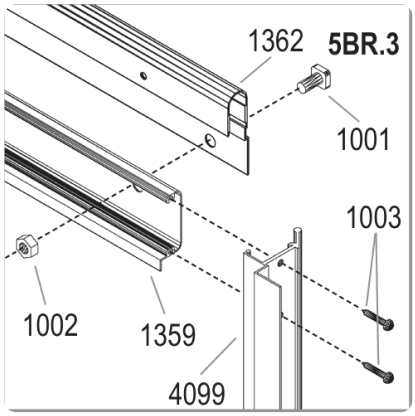


## 5BR.3

Bolt door bar 1362 to upper bar 1359 with bolt 1001 and nut 1002. Screw inside side bar 4099 onto the right-hand door with screws 1003.

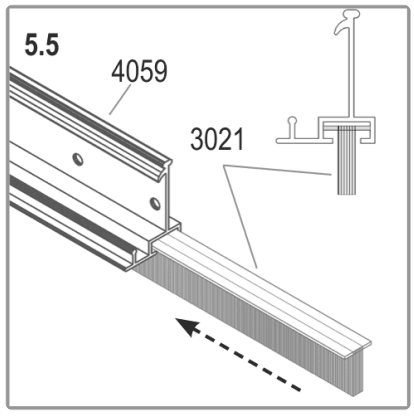


## 5.5 OUTSIDE VIEW

Slide door seal 3021 into side bar 4059.

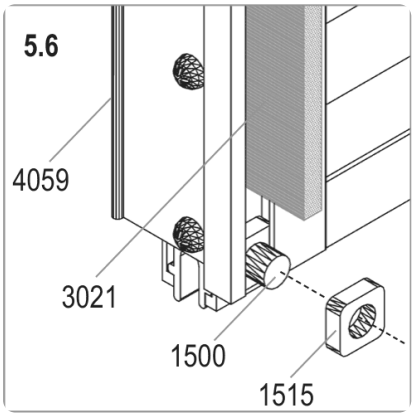


## 5.6

Slide bolt 1500 into the bottom of the door seal 3021 channel and secure it with nut 1515. Cut door seals 3021 to length.

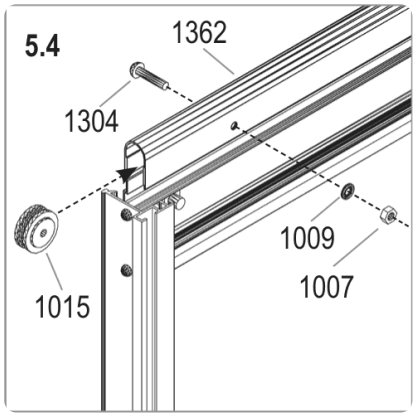


## 5.4

Fix the two door rollers 1015 to door bar 1362 with bolt 1304, washer 1009 and nut 1007.

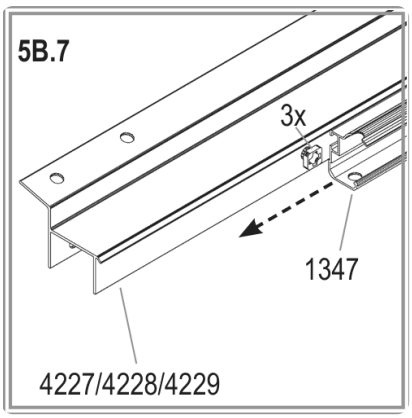


## 5B.7 OUTSIDE VIEW

Connect door runner bar 1347 to your eave bar (4227, 4228 or 4229).

**DO THIS NOW**

Put bolt 2001 with nut 1002 into the join between the two door runner bars 1347 as shown.

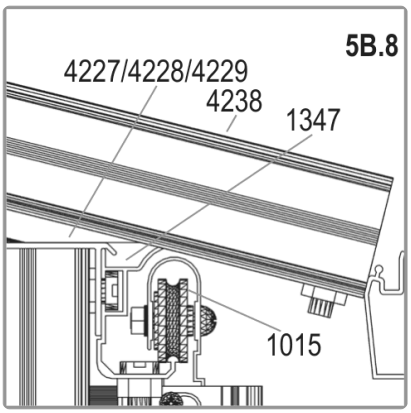


## 5B.8 OUTSIDE VIEW

Lift the door and slide door rollers 1015 into door runner bar 1347.

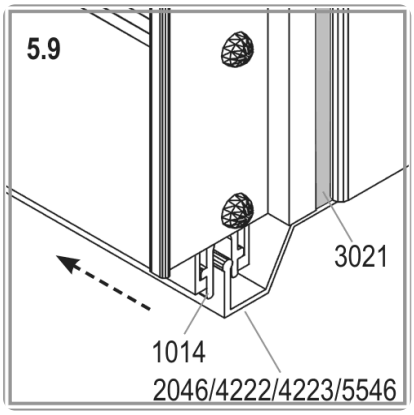


## 5.9 OUTSIDE VIEW

Check that door gliders 1014 also run in the bottom track.

**DO THIS NOW**

Once both doors are in place, fit nuts and bolts into the ends of both door runner bars 1347. Adjust both doors until they slide freely.

STEP 6

# 6 Build and fit roof vents

Build one roof vent for the 5200, or two for the 6500 and 7800.

## YOU NEED

- **1001** ×8
- **1002** ×18
- **1006** ×12
- **1019** ×2
- **1063** ×2
- **1064** ×2
- **1065** ×4
- **1066** ×2
- **1067** ×2
- **2016** ×4

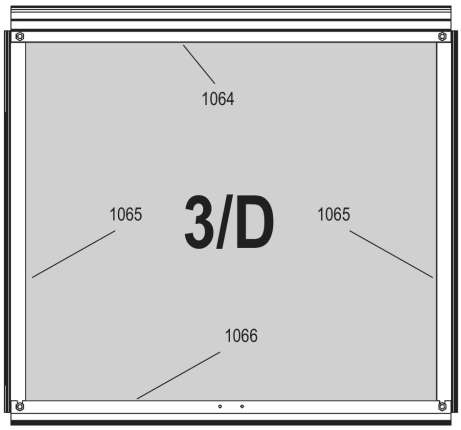


| Art. No. 3 | Art. No. D | mm | 5200 | 6500 | 7800 |
|---|---|---|---|---|---|
| 3679491 | 369430 | 600 x 544 | 1 | 2 | 2 |

Vitavia drawing 6. The circled numbers match the pictures below.

### INSTALLER TIP

Fit window sill 1063 flat edge up, with its grooved lip facing down towards the pane below. Recheck its position if that pane will not sit snugly.

**Watch: Build and fit the window**

Scan with your phone camera. Vitavia video.

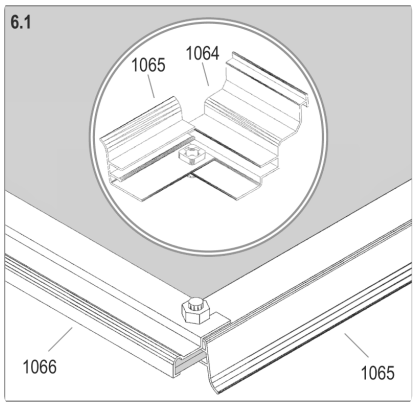


## 6.1

For a pane up to 4 mm thick, join side bars 1065 and top bar 1064 as shown here.

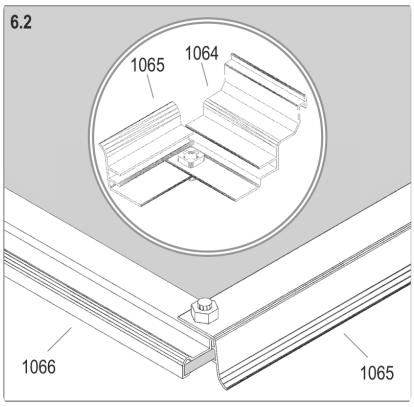


## 6.2

For a pane 4 mm or thicker, join side bars 1065 and top bar 1064 as shown here instead.

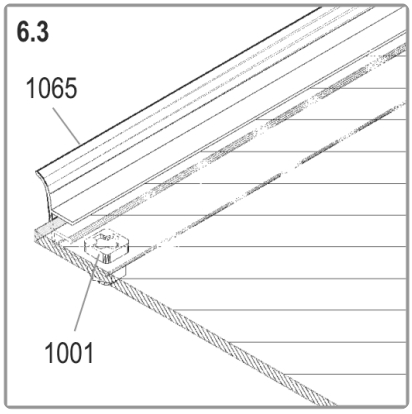


## 6.3 OUTSIDE VIEW

Put bolts 1001 for bottom bar 1066 into the prepared holes and slide the pane into side bars 1065. Fit bottom bar 1066, check the vent is completely square, then tighten the bolts.

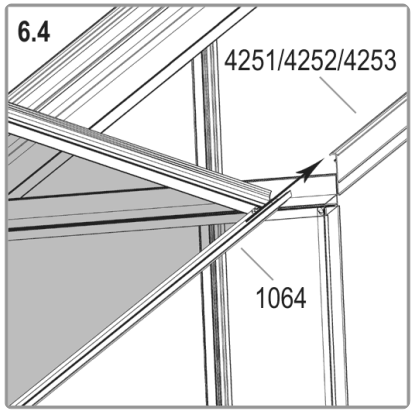


## 6.4 OUTSIDE VIEW

Hook the vent into your ridge bar (4251, 4252 or 4253) from one end of the greenhouse.

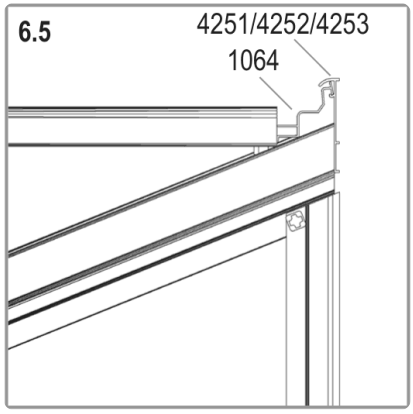


## 6.5 OUTSIDE VIEW

Hook vent top bar 1064 over the ridge bar as shown.

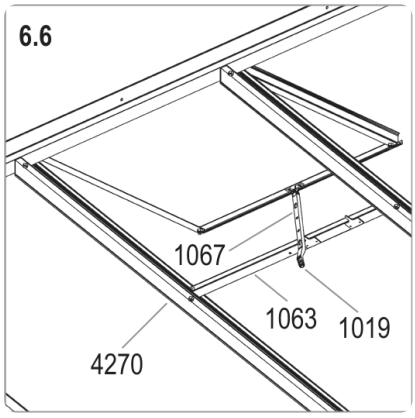


## 6.6

Slide the vent to your chosen position. Push plastic cap 1019 over the end of window opener 1067.

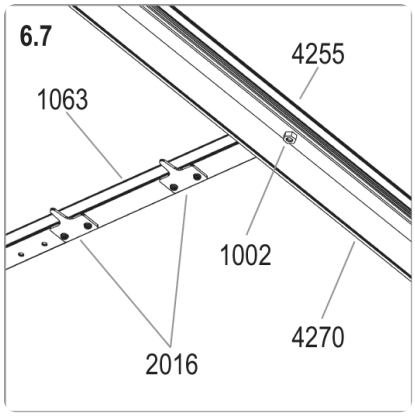


## 6.7

Fix window sill 1063 to extra bolts 1001 between roof glazing bars 4255 and strengtheners 4270 with nuts 1002. Fit both window fixers 2016 to window sill 1063.

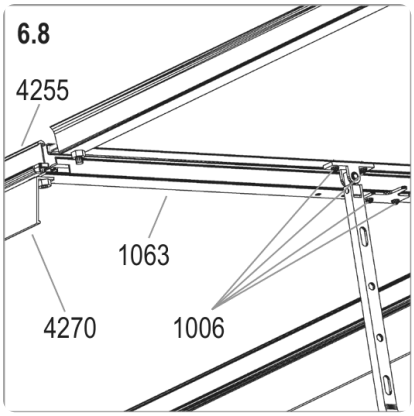


## 6.8

Screw window opener 1067 to vent bottom bar 1066 with screws 1006. Use screws 1006 to secure both window fixers 2016 to window sill 1063.

STEP 7A

# 7A Fit glass walls and roof

Follow this step for glass walls with a polycarbonate roof.

## YOU NEED

- **1011** ×182
- **1012** ×40
- **1020** ×1
- **6600** ×12
- **015141** ×6

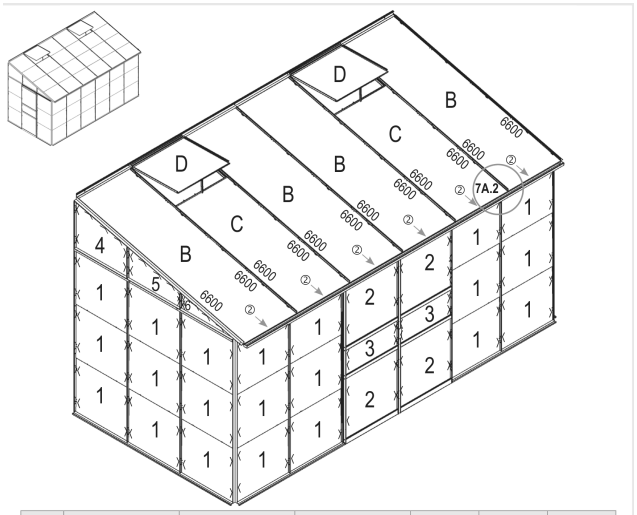


| | No. | PC, mm | Glass, mm | 5200 | 6500 | 7800 |
|---|---|---|---|---|---|---|
| B | 369968 | 610 x 2030 x 6 | | 3 | 3 | 4 |
| C | 369969 | 610 x 1484 x 6 | | 1 | 2 | 2 |
| D | 369430 | 600 x 544 x 4 | | 1 | 2 | 2 |
| 1 | 3679961 | | 610 x 561 | 24 | 27 | 30 |
| 2 | 3679011 | | 610 x 610 | 4 | 4 | 4 |
| 3 | 3679481 | | 610 x 248 | 2 | 2 | 2 |
| 4 | 3679931 | | 610 x 472/320 | 2 | 2 | 2 |
| 5 | 3679941 | | 610 x 317/165 | 2 | 2 | 2 |
| 6 | 3679951 | | 610 x 162/10 | 2 | 2 | 2 |
| Total | | | | 41 | 46 | 50 |

Vitavia drawing 7A. The circled numbers match the pictures below.

### INSTALLER TIP

Soak the whole reel of glazing seal in hot soapy water first. This softens it and makes it easier to press on.

### WATCH OUT

Never force a pane. If it will not seat, correct the frame's squareness first.

**Watch: Fitting the glazing rubber**

Scan with your phone camera. Vitavia video.

**Watch: Glazing with horticultural glass**

Scan with your phone camera. Vitavia video.

### DO THIS NOW

Use polycarbonate panes B, C and D for the roof above your glass walls. For an entirely polycarbonate greenhouse, follow step 7B instead.

**DO THIS NOW**

Face the UV-resistant side outside, identified by the film and edge printing. Remove film completely after fitting; panes are slightly short for expansion.

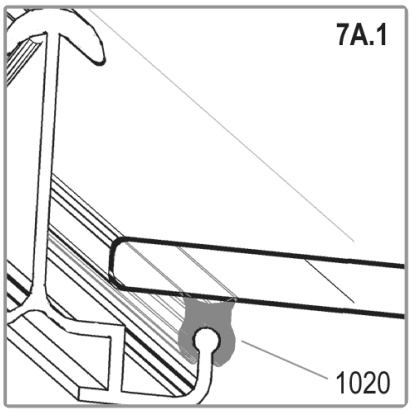


## 7A.1 OUTSIDE VIEW

Press glazing seals 1020 onto the aluminium profiles and cut them to length.

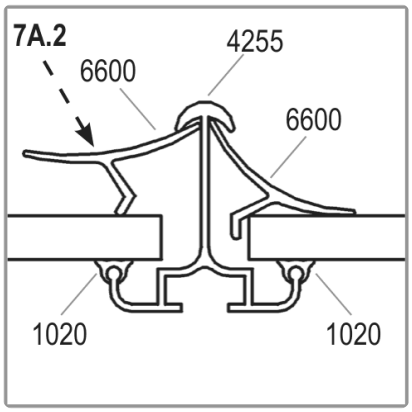


## 7A.2 OUTSIDE VIEW

Secure the roof polycarbonate panes with wind fixing strips 6600 between each pane and roof glazing bar 4255. Use the number of strips shown for each pane.

**DO THIS NOW**

Drill a 2 mm hole through each pane's bottom centre and aluminium profile; the drill is not included. Secure with screw 015141 and washer, supplied with the panes, for extra stability.

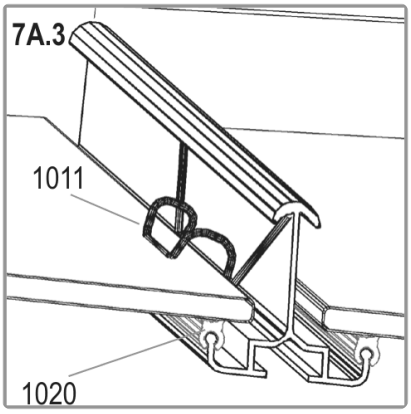


## 7A.3 OUTSIDE VIEW

Start at the bottom of the walls. Secure the first glass pane with glazing spring clips 1011.

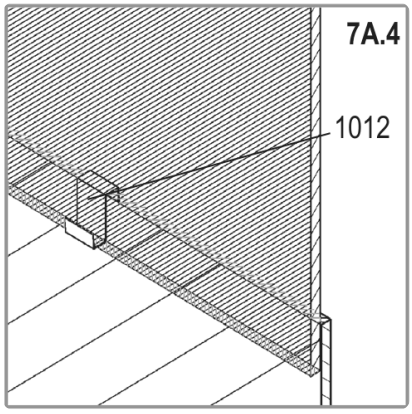


## 7A.4 OUTSIDE VIEW

Place each next pane over the pane directly below it. Secure it with glass retaining clips 1012 between the panes.

STEP 7B

# 7B Fit all polycarbonate glazing

Follow this step only if your greenhouse is glazed entirely with polycarbonate.

## YOU NEED

- **1011** ×270
- **1020** ×1
- **015140** ×16
- **015141** ×6
- **015142** ×6

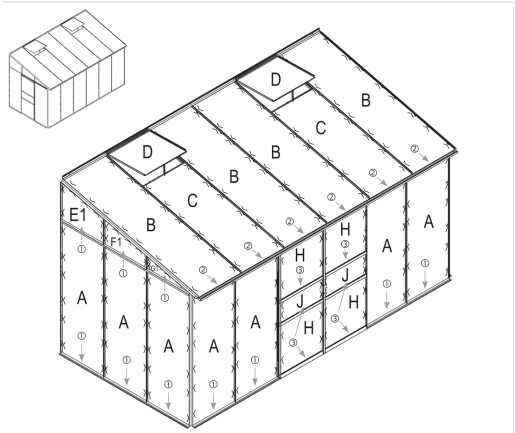


| | No. (4mm PC) | No. (6mm PC) | mm | 5200 | 6500 | 7800 |
|---|---|---|---|---|---|---|
| A | 369867 | 369967 | 610 x 1656 | 8 | 9 | 10 |
| B | 369868 | 369968 | 610 x 2030 | 3 | 3 | 4 |
| C | 369869 | 369969 | 610 x 1484 | 1 | 2 | 2 |
| D | 369430 | 369430 | 600 x 544 x 4 | 1 | 2 | 2 |
| E1/E2 | 369871/369872 | 369971/369972 | 610 x 472/320 | 2 | 2 | 2 |
| F1/F2 | 369874/369875 | 369974/369975 | 610 x 317/165 | 2 | 2 | 2 |
| G1/G2 | 369877/369878 | 369977/369978 | 610 x 162/10 | 2 | 2 | 2 |
| H | 369426 | 3694261 | 610 x 610 | 4 | 4 | 4 |
| J | 369488 | 3694881 | 610 x 248 | 2 | 2 | 2 |
| Total | | | | 25 | 28 | 30 |

Vitavia drawing 7B. The circled numbers match the pictures below.

**INSTALLER TIP**

Soak the whole reel of glazing seal in hot soapy water first. This softens it and makes it easier to press on.

**WATCH OUT**

The panes are deliberately slightly short to allow expansion. Leave the protective film on until each pane is fitted, then remove it completely.

**Watch: Fitting the glazing rubber**

Scan with your phone camera. Vitavia video.

**DO THIS NOW**

Use this step for an entirely polycarbonate greenhouse. Follow the drawing to position panes A to J.

**DO THIS NOW**

Face the UV-resistant side outside, identified by the film and edge printing. Remove film completely after fitting; panes are slightly short for expansion.

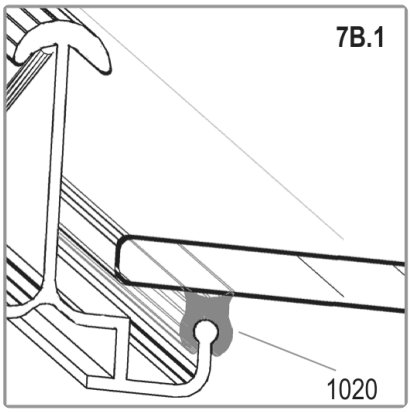


## 7B.1 OUTSIDE VIEW

Press glazing seals 1020 onto the aluminium profiles and cut them to length.

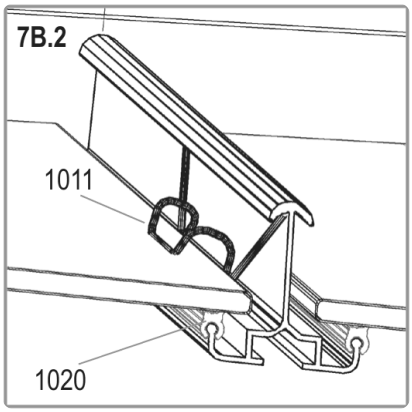


## 7B.2 OUTSIDE VIEW

Secure the polycarbonate panes with glazing spring clips 1011. Use the number of clips shown for each pane.

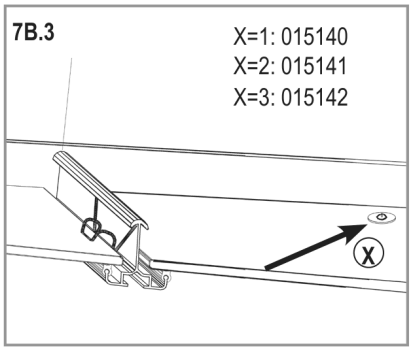


## 7B.3 OUTSIDE VIEW

For extra stability, fix each pane with a screw and washer. Drill a 2 mm hole through the pane and the aluminium profile, in the middle of the bottom of each pane; the drill is not included. Screws: 1 is 015140, 2 is 015141, 3 is 015142.

STEP 8

# 8 Fit the down pipes

Fit the down pipes on both sides of the greenhouse.

## YOU NEED

| | |
|---|---|
| **1006** ×4 | **1402** ×6 |
| **1403** ×4 | **1408** ×2 |
| **1413** ×2 | **1416** ×2 |
| **1417** ×2 | |

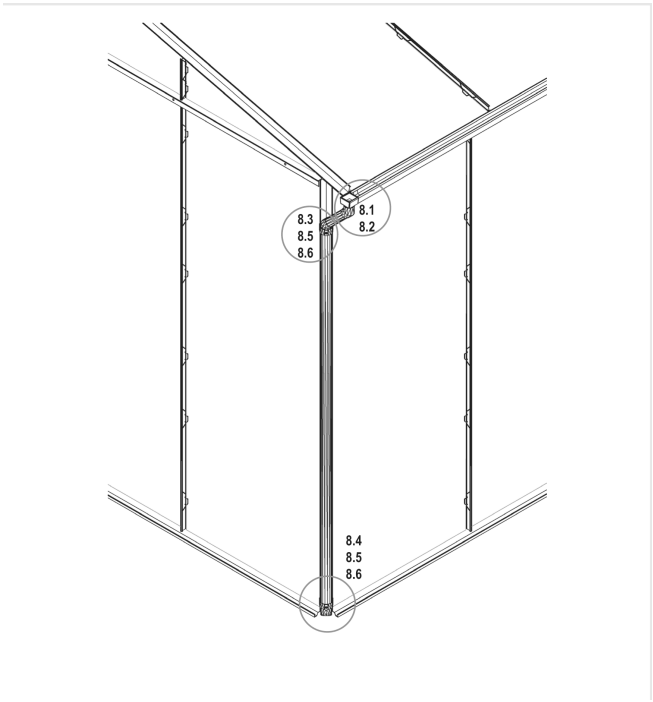


Vitavia drawing 8. The circled numbers match the pictures below.

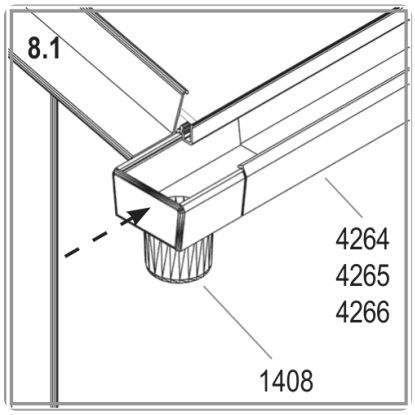


### 8.1 OUTSIDE VIEW

Push part 1408 into the end of your gutter bar (4264, 4265 or 4266) as shown.

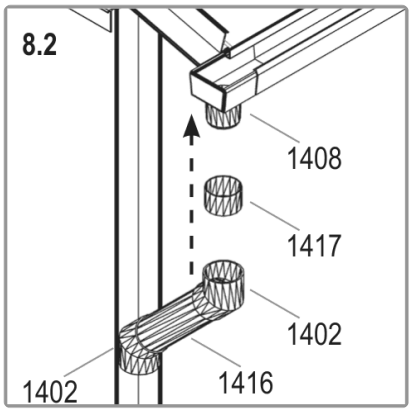


### 8.2 OUTSIDE VIEW

Join part 1402 to part 1408 with connection 1417 between them. Join the next part 1402 with part 1416 as shown.

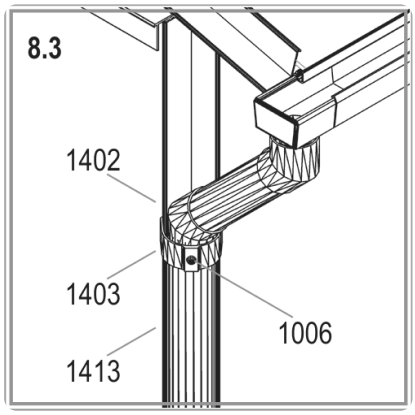


### 8.3 OUTSIDE VIEW

Fit pipe 1413 to part 1402. Secure it with part 1403 and screw 1006 as shown.

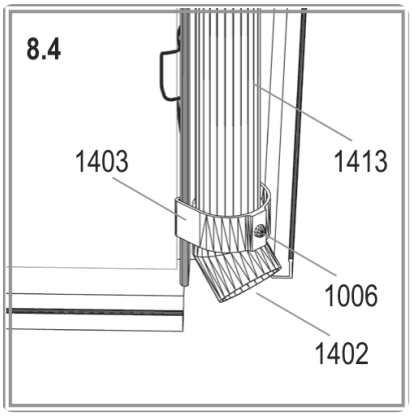


**8.4** OUTSIDE VIEW

Fit part 1402 to the bottom of pipe 1413. Secure it with part 1403 and screw 1006.

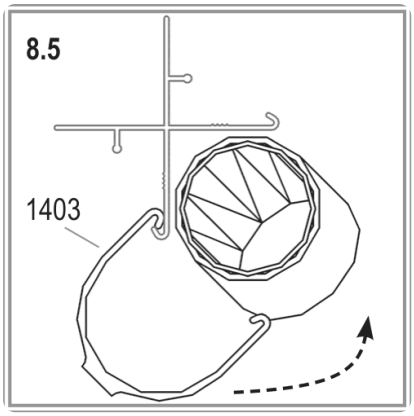


**8.5** OUTSIDE VIEW

Wrap part 1403 around the pipe and onto the aluminium profile, following the arrow.

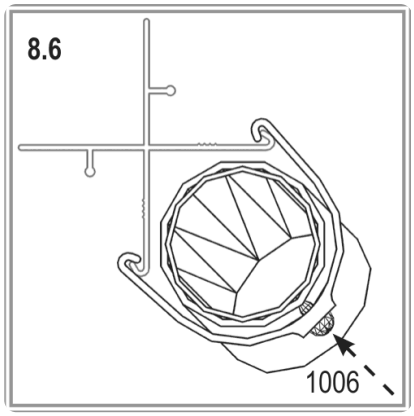


**8.6** OUTSIDE VIEW

Secure part 1403 with screw 1006.

LAST JOBS

# Finish and look after it

## Finish

- [ ] Anchor the greenhouse. This is not optional.
- [ ] Seal the edges with neutral silicone if you wish. Silicone is not supplied.
- [ ] Stick the warning label inside the greenhouse.
- [ ] Stick the model label onto door bar 1362. You will need it to order spare parts.
- [ ] Keep this guide somewhere safe.

## Looking after it

- [ ] Shut all doors and vents in high winds.
- [ ] Clear the roof or support it in heavy snow. Heat the greenhouse in winter.
- [ ] Wash occasionally with a mild detergent that does not attack aluminium or the glass fixing clips.
- [ ] Keep the upper and lower door tracks clean to prevent grit build-up.
- [ ] Add the greenhouse to your home insurance. Check local building rules about where it can go.

Drawings reproduced from the Vitavia assembly instructions (Vitavia manual 050.01.1209 (Ida 5200, 6500 and 7800)). Greenhouse Stores, greenhousestores.co.uk.