Greenhouse Stores

ASSEMBLY GUIDE

Jupiter 6700

8x8 Vitavia greenhouse

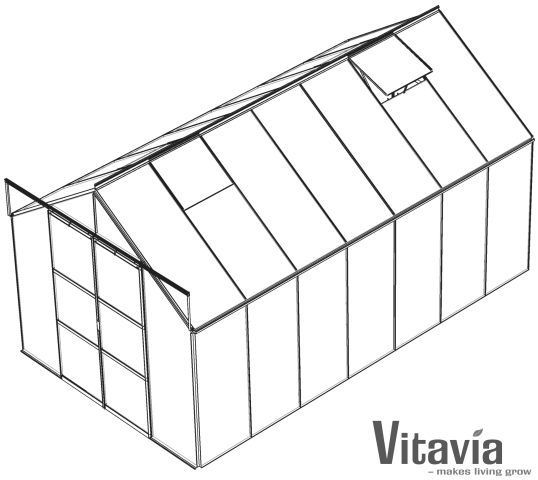

9
steps, base first

2
people needed

2544 mm × 2544 mm
base size (A × B)

Toughened glass version

Online version with every size: www.greenhousestores.co.uk/instructions/vitavia-jupiter/

The build at a glance

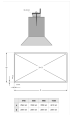

0
Prepare your base

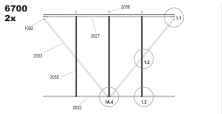

1
Build both side frames

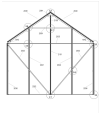

2
Build the back gable

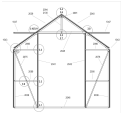

3
Build the door gable

4
Join and stand the frame

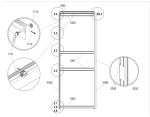

5R
Fit the right-hand door

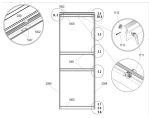

5L
Fit the left-hand door

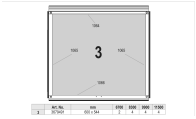

6
Fit the roof vents

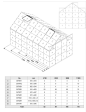

7
Fit the glazing

Drawings: Vitavia (Vitavia manual 001.02.1208 (Jupiter, printed as Uranus)). Words and layout: Greenhouse Stores, greenhousestores.co.uk. Keep this guide with your greenhouse.

READ THIS FIRST

Before you start

Six golden rules

1. Build frames loose; tighten only when the whole greenhouse stands square on its base.
2. Measure both diagonals; they must be equal.
3. Never overtighten nuts 1002: maximum 3 Nm. Overtightening strips aluminium and cracks glass.
4. Fit extra bolts when instructed; you cannot add them after bar ends are capped.
5. Build with two people.
6. Always anchor your greenhouse. An unanchored greenhouse can blow away.

Get ready

- [ ] Read the whole guide once before you start.
- [ ] Gather flat/PH2 screwdrivers, 10 mm socket spanner/wrench, 10 mm combination spanner, knife, tape measure, spirit level. Set cordless drill adjustable torque low.
- [ ] Wear gloves, safety glasses, sturdy shoes and a hat. Aluminium edges are sharp. Clear up broken glass straight away.
- [ ] Open one bundle at a time and keep opened bundles apart. Mixed bundles are the main cause of lost-part searches.
- [ ] Check every part against the parts check pages. Contact Greenhouse Stores before you begin if anything is missing.
- [ ] Read single-frame drawings as views from inside the greenhouse. Read double-frame drawings as views from outside.
- [ ] Choose a sunny spot with as much shelter from wind as possible.

Read next: 10 common greenhouse installation mistakes (and how to avoid them)

Single frame: inside view Double frame: outside view

BEFORE STEP 1

Parts check

Open one bundle at a time. Tick each part as you find it. The number in green is how many your Jupiter 6700 should have.

Bars and profiles

1020 Glazing seal (reel) 95000 mm ×1	**1043** 170 mm ×4	**1047** Door runner bar 1257 mm ×2	**1059** Upper bar 621 mm ×2	**1060** Door bar 621 mm ×2	**1061** 621 mm ×4
1062 Door top bar 613 mm ×2	**1063** Vent sill 635 mm ×2	**1064** Vent top bar 602 mm ×2	**1065** Vent side bar 520 mm ×4	**1066** Vent bottom bar 602 mm ×2	**1067** Window opener 295 mm ×2
1092 Corner plate 120 mm ×12	**2005** 100 mm ×1	**2021** Door brush seal 1923 mm ×2	**2022** 2484 mm ×3	**2027** 2484 mm ×2	**2033** Cross brace 1898 mm ×10
2035 Cross brace 2476 mm ×1	**2036** 1511 mm ×4	**2039** 1535 mm ×2	**2040** 1535 mm ×2	**2041** Vertical bar 1963 mm ×2	**2042** Vertical bar 1963 mm ×2
2043 Door runner support 416 mm ×2	**2046** Bottom track 2484 mm ×1	**2048** Horizontal bar 1318 mm ×1	**2050** Ridge bar 2484 mm ×1	**2054** 1318 mm ×1	**2055** Glazing bar 1511 mm ×12
2056 Corner brace 255 mm ×6	**2057** Roof brace 1184 mm ×3	**2058** Door side bar (outside) 1923 mm ×2	**2075** 1575 mm ×1	**2076** 1575 mm ×1	**2089** 619 mm ×1
2090 619 mm ×1	**2091** 175 mm ×2	**2094** 426 mm ×1	**2096** 619 mm ×2	**2098** Door side bar (inside, right) 1923 mm ×1	**2099** Door side bar (inside, left) 1923 mm ×1

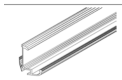

2100
425 mm **×2**

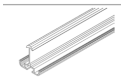

2101
Vertical bar
1963 mm **×1**

Fixings and small parts

1001
Bolt
M6 × 12 **×218**

1002
Nut
M6 **×221**

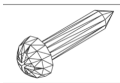

1003
Screw
3.5 × 16 **×32**

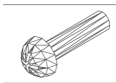

1004
Bolt
M4 × 16 **×4**

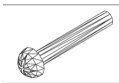

1005
Bolt
M6 × 40 **×2**

1006
Screw
3.5 × 6 **×12**

1007
Nut
M4 **×4**

1009
Washer
Ø8/4 **×4**

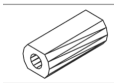

1010
Spacer
32 **×2**

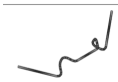

1011
Glazing spring clip
70 **×348**

1012
Glass retaining clip
11 **×126**

1014
Door glider
20 **×4**

1015
Door roller
Ø22 **×4**

1017
End cap
46 **×4**

1018
End cap
43.7 **×8**

1019
Plastic cap
15 **×2**

1111
Door fixer
37.5 **×2**

1112
Door fixer
7.4 **×2**

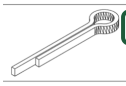

1113
Door fixer
25 **×2**

1500
Bolt
M6 × 5 **×2**

1515
Nut
M6 **×2**

2001
Corner bolt
M6 × 12 **×1**

2006
10 **×2**

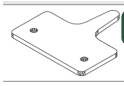

2016
Window fixer
40 **×4**

2092
37 **×2**

2093
56 **×3**

5001
40 **×1**

5002
40 **×1**

6060
Washer
Ø12/6 **×2**

STEP 0

0 Prepare your base

Greenhouse Stores

Start with an exactly square, level base before you assemble the greenhouse.

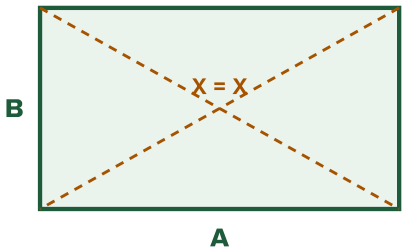

	JUPITER 6700
A	2544 mm
B	2544 mm

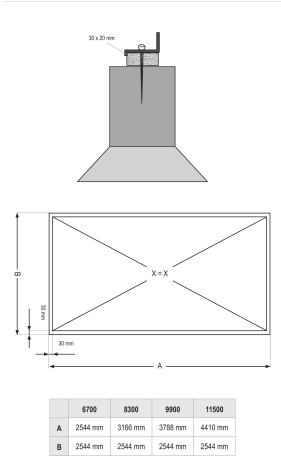

Vitavia drawing 0. The circled numbers match the pictures below.

INSTALLER TIP

Use ground spikes or anchor legs only in soil. On concrete or paving, bolt down with suitable fixings; use one method, not both.

WATCH OUT

The Jupiter is big; an uneven or unsquare base leaves the frame misaligned, and the glass will not fit. Check both diagonals twice.

0.1

Use an exactly square, level base; the accessory zinc-coated steel base is the easiest option. Measure both diagonals, shown as X = X, and check they match.

0.2

For stone or concrete foundations, use page dimensions A and B; extend below frost level. Fit treated timber, minimum 18 mm high, maximum 32 mm wide, beneath aluminium; secure with 50 mm bolts, not supplied.

0.3

On very windy, exposed sites, drill through the greenhouse bottom profile and the steel base. Bolt them together.

STEP 1

1 Build both side frames

Greenhouse Stores

Build two identical sides flat on the ground; use drawing 1A for 6700/8300 or 1B for 9900/11500.

YOU NEED

- **1001** ×40
- **1002** ×40
- **1092** ×4
- **2022** ×2
- **2027** ×2
- **2033** ×4
- **2055** ×6
- **2056** ×6
- **2093** ×2

6700
2x

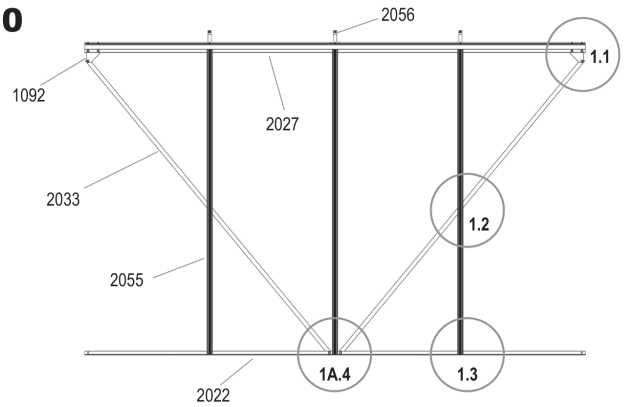

Vitavia drawing 1A. The circled numbers match the pictures below.

INSTALLER TIP

Lay the parts on a blanket or lawn to protect the finish. Leave every nut loose so the frames can flex during step 4.

WATCH OUT

Fit all extra bolts now; the Jupiter needs several per side. You cannot add them once the bar ends are closed.

Watch: Build the sides

Scan with your phone camera. Vitavia video.

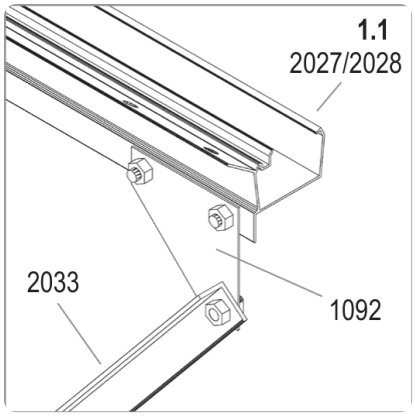

1.1

Loosely fit corner plate 1092 where cross brace 2033 meets your eave bar (2027, 2028, 2029 or 2030). Leave its bolts loose for the gable connections in step 4.

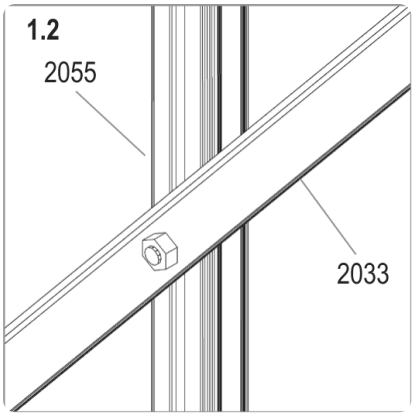

1.2

Slide one extra bolt into each of the two outer uprights 2055. Leave these ready to connect cross brace 2033.

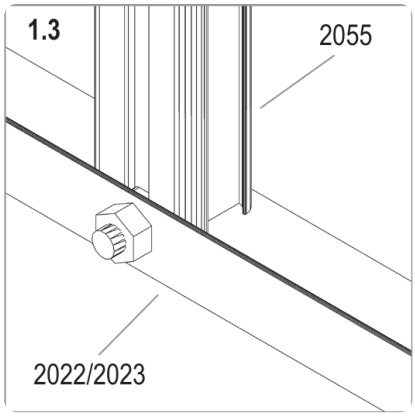

1.3

Bolt each upright 2055 at the bottom to your sill bar (2022, 2023, 2024 or 2025).

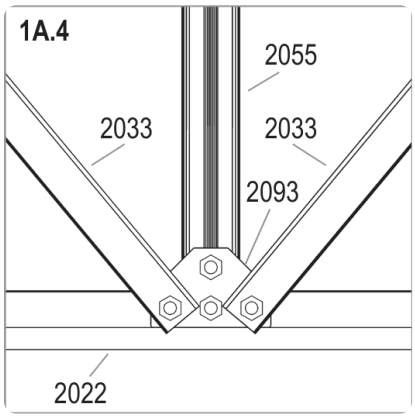

1A.4

For the 6700 or 8300, join cross braces 2033 and upright 2055 to your sill bar (2022 or 2023). Use connector plate 2093 or 2092 as shown.

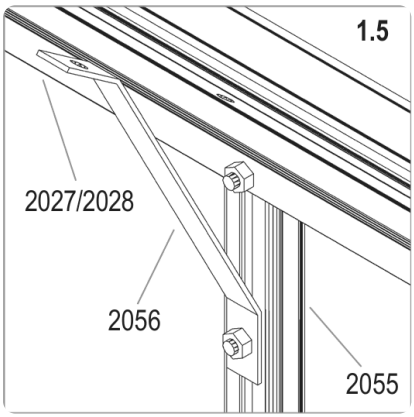

1.5

Slide an extra bolt into each upright 2055 now. Leave it ready for corner brace 2056, which runs between the eave bar and upright.

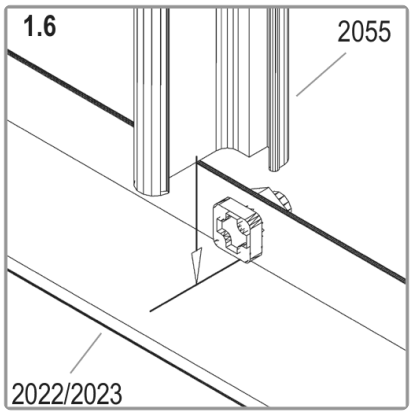

1.6 OUTSIDE VIEW

Slide the bolts into the sill bar channel through its open end, as the arrow shows. Do this before you close the bar end.

STEP 2

2 Build the back gable

Greenhouse Stores

Assemble the plain back gable flat on the ground, with all nuts loose.

YOU NEED

1001 ×31	**1002** ×31
1043 ×2	**2022** ×1
2033 ×2	**2035** ×1
2036 ×2	**2039** ×1
2040 ×1	**2041** ×1
2042 ×1	**2054** ×1
2091 ×1	**2093** ×1
2100 ×1	**2101** ×1

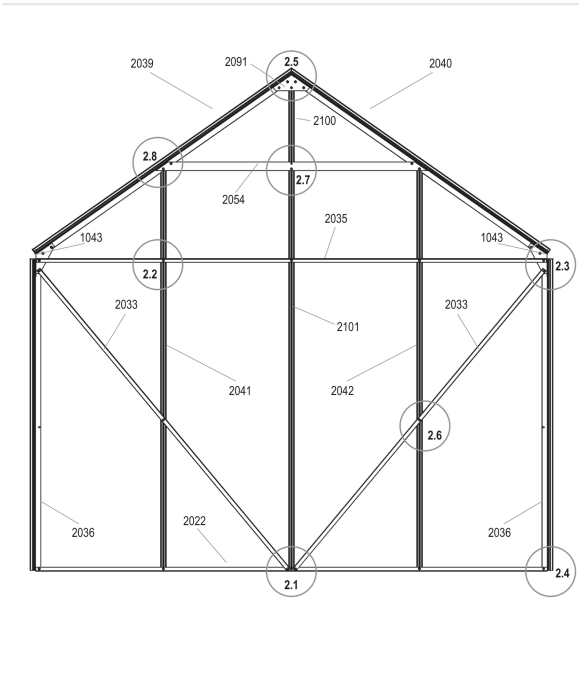

Vitavia drawing 2. The circled numbers match the pictures below.

INSTALLER TIP

Build upwards from the bottom. Slide each extra bolt into its channel before you fit the bar above.

WATCH OUT

Insert the extra bolts now. Without them, you must take the gable apart to fit the cross braces in step 4.

Watch: Rear gable end

Scan with your phone camera. Vitavia video.

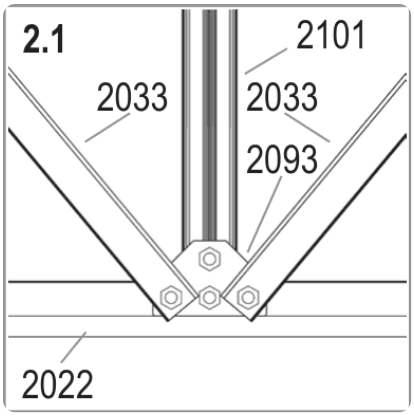

2.1

Join upright 2101 and both cross braces 2033 to sill bar 2022 at the bottom centre. Use connector plate 2093.

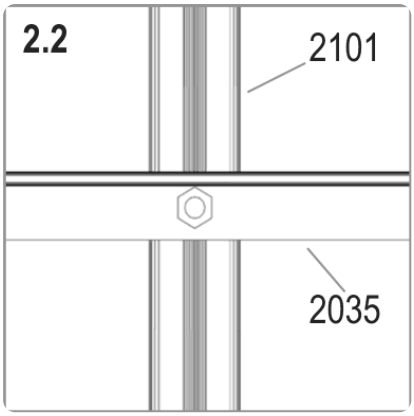

2.2

Bolt cross brace 2035 across upright 2101. Insert two extra bolts into each upright 2041 and 2042 for the cross braces, and one into upright 2101.

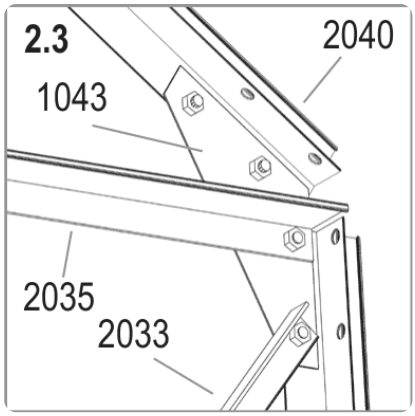

2.3

Join roof bar 2040, cross brace 2035 and cross brace 2033 at each top corner. Use corner plate 1043.

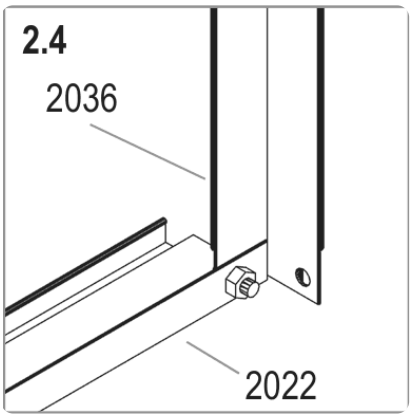

2.4

Bolt corner bar 2036 to sill bar 2022 at each bottom corner.

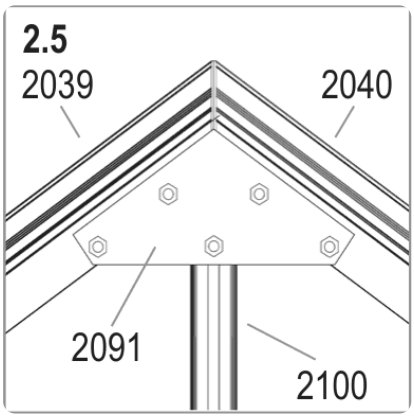

2.5

Join roof bars 2039 and 2040 to the top of upright 2100 at the peak. Use apex plate 2091.

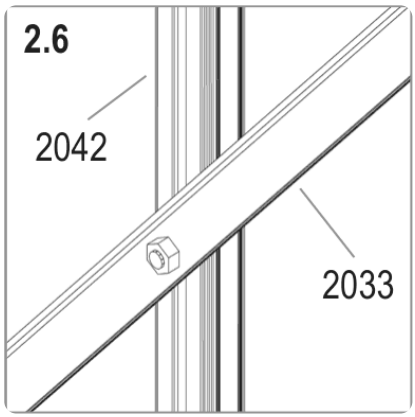

2.6

Bolt cross brace 2033 across upright 2042.

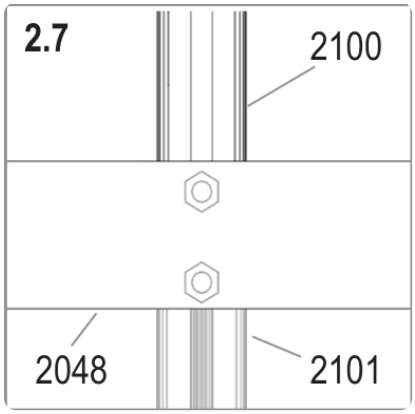

2.7

Join uprights 2100 and 2101 to horizontal bar 2048 with two bolts.

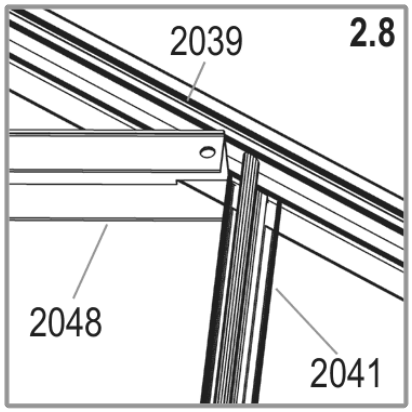

2.8 OUTSIDE VIEW

Join horizontal bar 2048 to upright 2041 under roof bar 2039, as shown.

STEP 3

3 Build the door gable

Greenhouse Stores

Assemble the front door gable flat on the ground, with all nuts loose.

YOU NEED

1001 ×39	1002 ×39
1043 ×2	1047 ×2
2036 ×2	2039 ×1
2040 ×1	2041 ×1
2042 ×1	2046 ×1
2048 ×1	2075 ×1
2076 ×1	2089 ×1
2090 ×1	2091 ×1
2092 ×2	2094 ×1
2096 ×2	2100 ×1
5001 ×1	5002 ×1

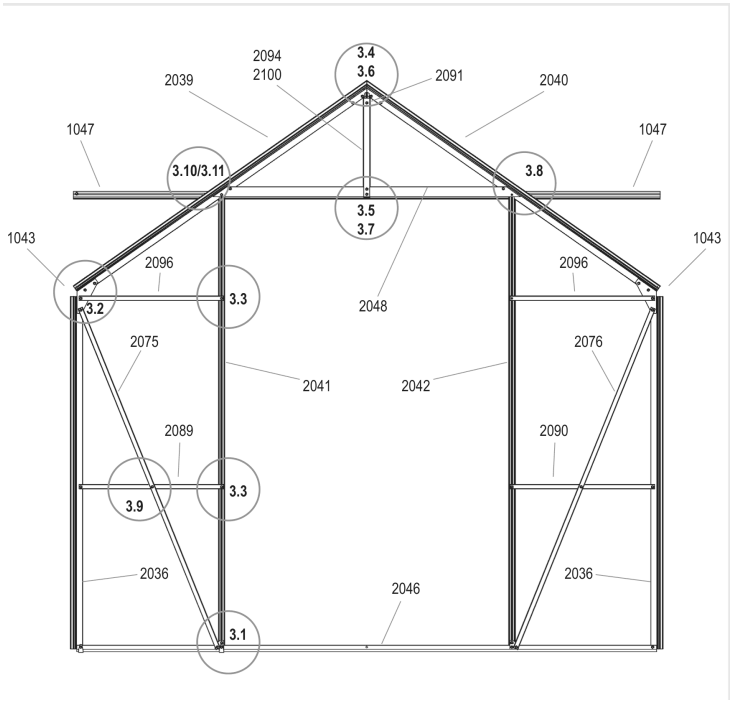

Vitavia drawing 3. The circled numbers match the pictures below.

INSTALLER TIP

The Jupiter has two sliding doors that meet in the middle. Each door runner bar 1047 carries one door.

WATCH OUT

If parts do not line up, check for bars fitted upside down or back to front. Do not force them.

Watch: Door frame (front gable)

Scan with your phone camera. Vitavia video.

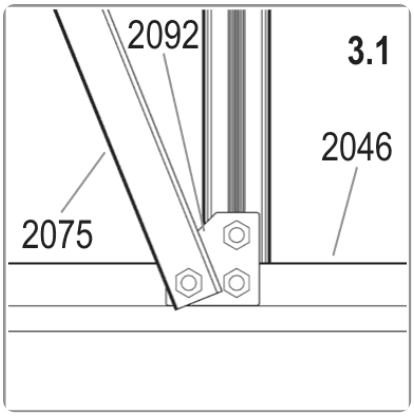

3.1

Join door post 2046 and brace 2075 at the bottom with connector plate 2092.

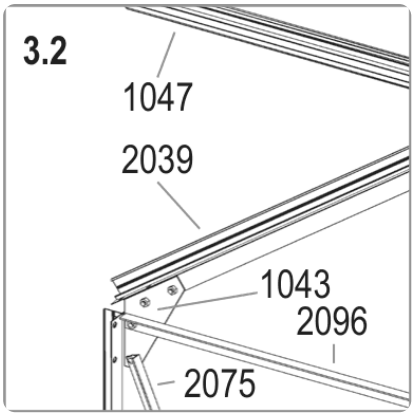

3.2

Join roof bar 2039, bar 2096 and brace 2075 at each top corner. Use corner plate 1043.

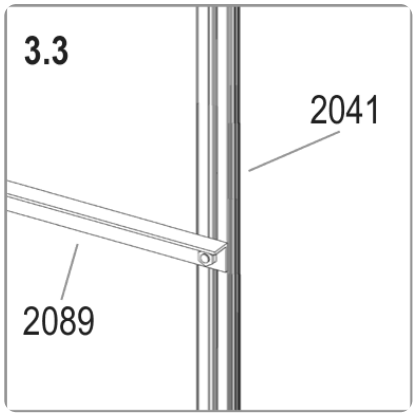

3.3

Bolt bar 2089 to upright 2041. Insert two extra bolts into each upright 2041 and 2042, as on the back gable.

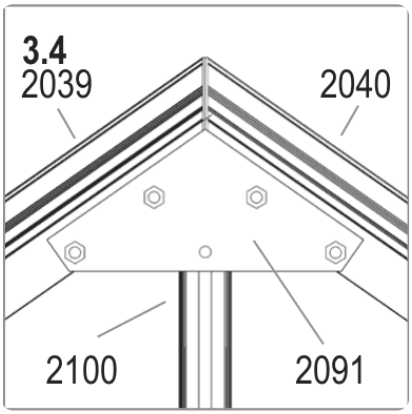

3.4

Join roof bars 2039 and 2040 to the top of upright 2100 at the peak. Use apex plate 2091.

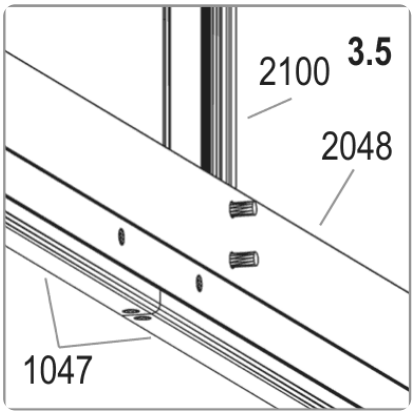

3.5

Position both door runner bars 1047 along horizontal bar 2048, below upright 2100.

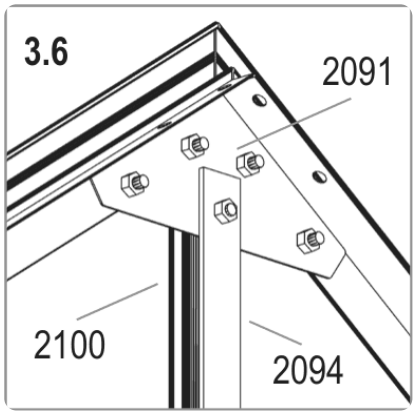

3.6

Join upright 2100 and bar 2094 with apex plate 2091, as shown.

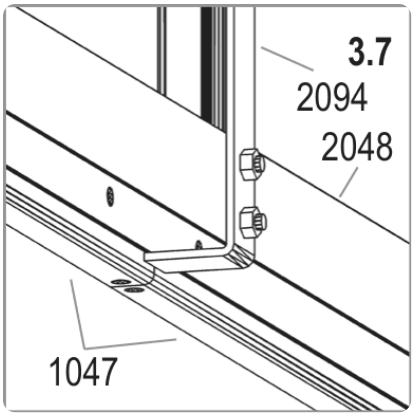

3.7

Bolt bar 2094 to horizontal bar 2048, with door runner bar 1047 below.

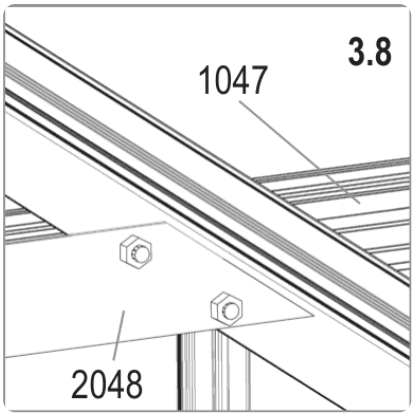

3.8

Join horizontal bar 2048 and door runner bar 1047 as shown.

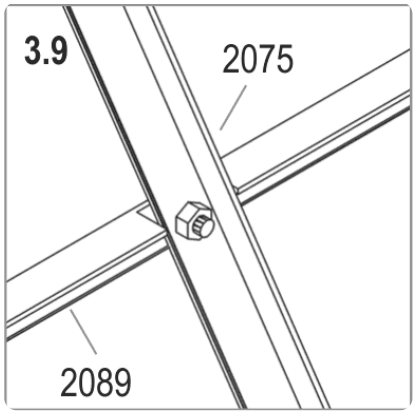

3.9

Bolt brace 2075 where it crosses bar 2089.

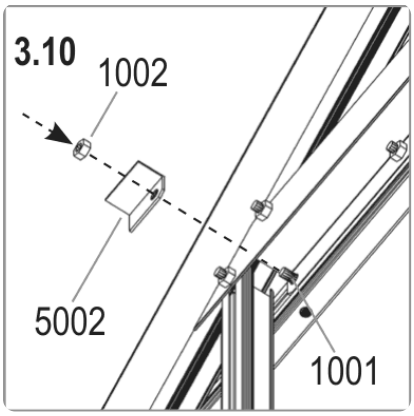

3.10

Connect part 5002 with bolt 1001 and nut 1002, as shown.

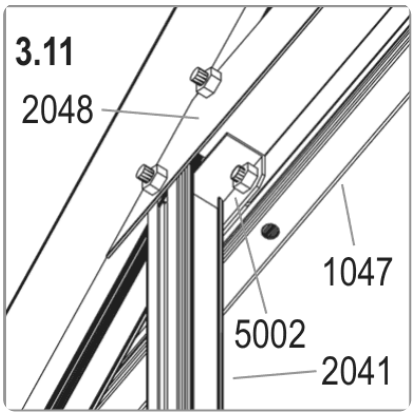

3.11

Join part 5002 to door runner bar 1047 at upright 2041 and horizontal bar 2048. Connect parts 5001 and 5002 with a nut and bolt.

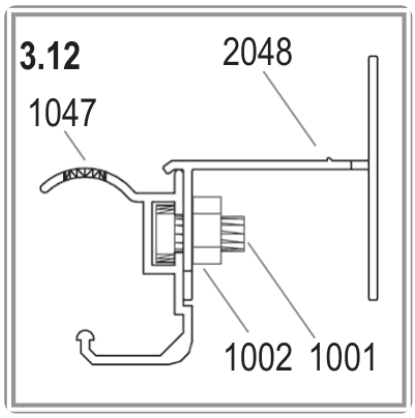

3.12 OUTSIDE VIEW

Work from the outside and loosely connect each door runner bar 1047 to horizontal bar 2048. Use two nuts 1002 and two bolts 1001 for each.

STEP 4

4 Join and stand the frame

Greenhouse Stores

Work with another person to join and stand the frame, using drawing 4A before drawing 4B.

YOU NEED

1001 ×76	**1002** ×78	**1005** ×2	**1010** ×2	**1092** ×8
2043 ×2	**2050** ×1	**6060** ×2	**1017** ×4	**1018** ×8
2033 ×4	**2055** ×6	**2057** ×3		

INSTALLER TIP

Count the circled extra bolts on every roof bar before you fit any end caps. Quantities depend on greenhouse size.

WATCH OUT

Keep all bolts loose until the greenhouse is square on its base, so you do not fix a twist. You cannot adjust the frame once the glass is fitted.

Watch: Front and roof bars

Scan with your phone camera. Vitavia video.

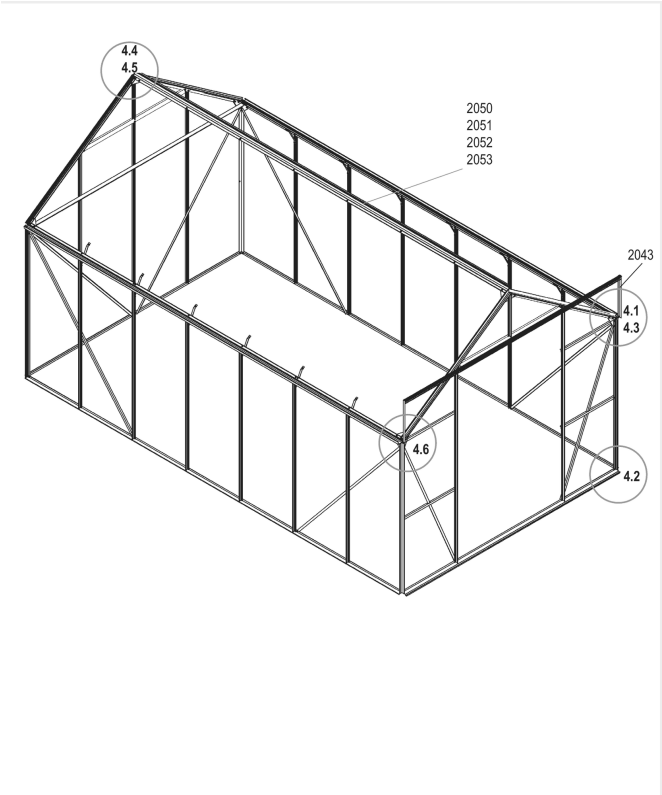

Vitavia drawing 4A. The circled numbers match the pictures below.

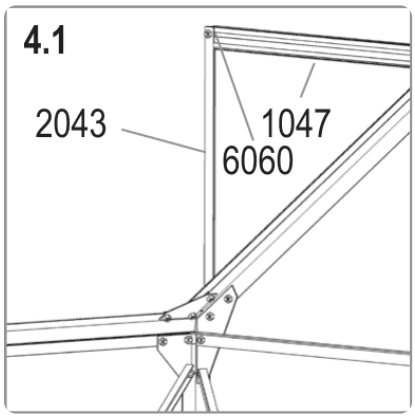

4.1

Fit door runner support 2043 to door runner bar 1047 with washer 6060.

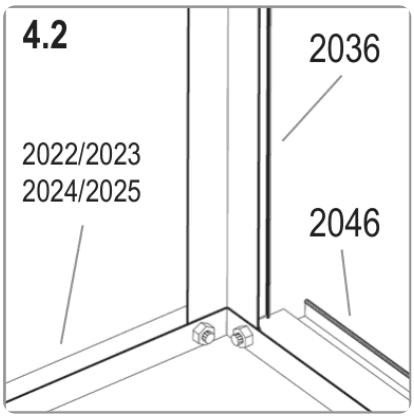

4.2

Bolt the side frames to the gable ends at the bottom corners. Join your sill bar to corner bar 2036 and door post 2046 as shown.

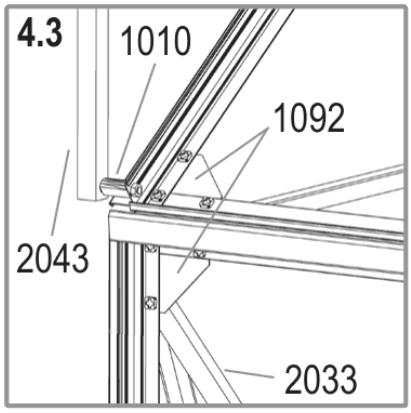

4.3 OUTSIDE VIEW

Loosely connect corner plate 1092 above the eaves. Position spacer 1010 and support 2043 at this corner, with cross brace 2033 below.

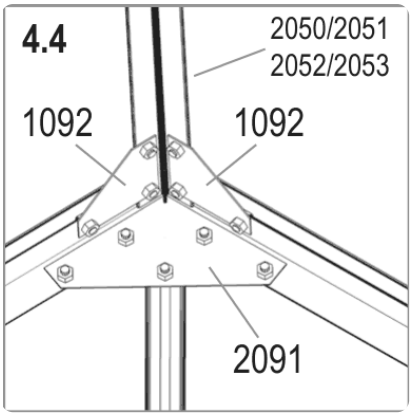

4.4

Fit your ridge bar (2050, 2051, 2052 or 2053). Fix corner plates 1092 to the gable ends at the peak, beside apex plate 2091.

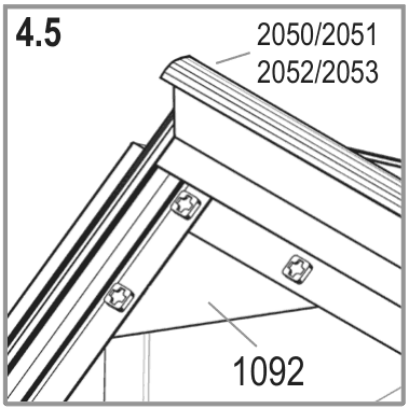

4.5 OUTSIDE VIEW

Fit corner plate 1092 under the ridge bar at each gable end, as shown.

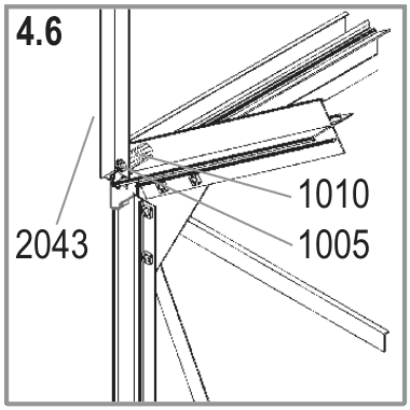

4.6 OUTSIDE VIEW

Fix door runner support 2043 to the gable end with bolt 1005 and spacer 1010.

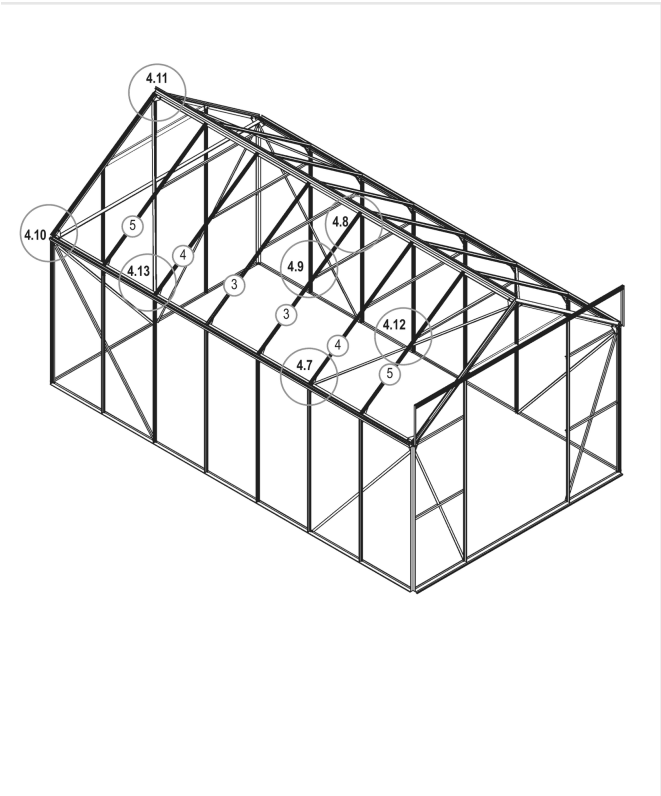

Vitavia drawing 4B. The circled numbers match the pictures below.

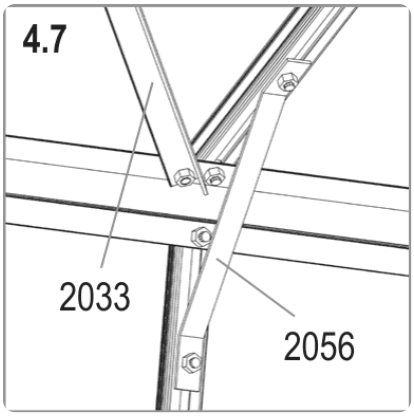

4.7

Connect corner braces 2056 and cross braces 2033 as shown in drawing 4B.

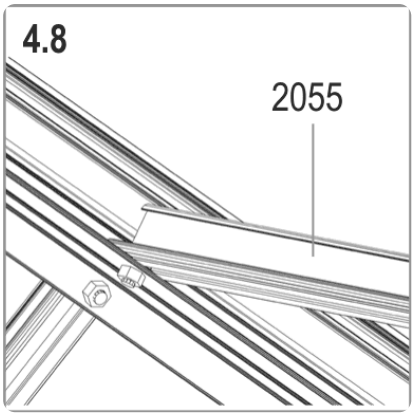

4.8

Bolt roof glazing bars 2055 between the eaves and ridge bar; insert extra bolts as you go. Read the circled bolt quantities on each bar from both ends.

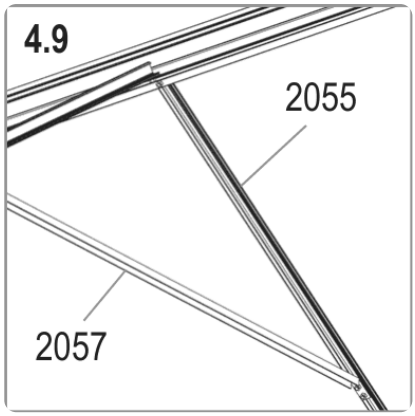

4.9

Connect roof braces 2057 to roof glazing bars 2055.

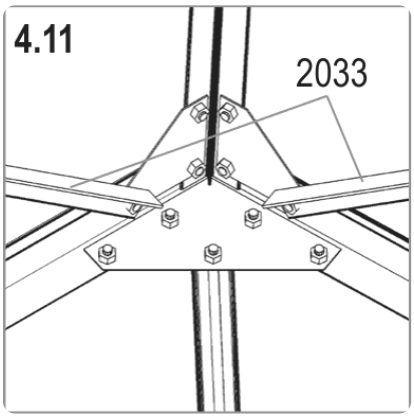

4.11

Connect cross braces 2033 at the gable peak, as shown.

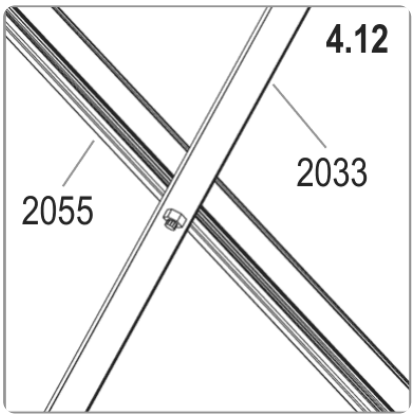

4.12

Bolt cross brace 2033 where it crosses roof glazing bar 2055.

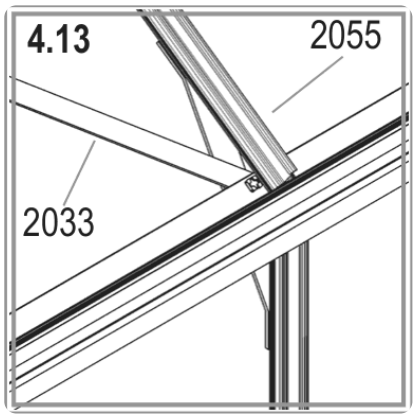

4.13 OUTSIDE VIEW

Work from the outside and connect cross brace 2033 to roof glazing bar 2055, as shown.

DO THIS NOW

Place the greenhouse on your prepared base and bolt it down loosely. Adjust until both corner-to-corner diagonals match, then tighten all bolts to a maximum of 3 Nm.

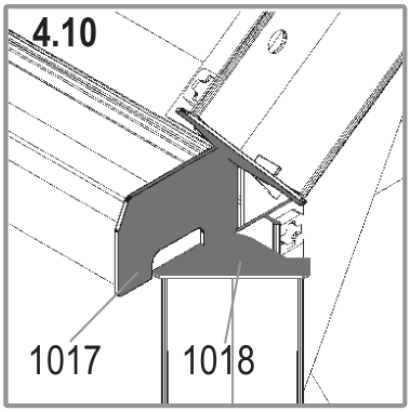

4.10 OUTSIDE VIEW

Press end caps 1017 and 1018 onto the open profile ends.

STEP 5R

5R Fit the right-hand door

Greenhouse Stores

Build and hang the right-hand door first; the Jupiter has two sliding doors.

YOU NEED

1001 ×2	**1002** ×2
1003 ×16	**1004** ×2
1007 ×2	**1009** ×2
1014 ×2	**1015** ×2
1059 ×1	**1060** ×1
1061 ×2	**1062** ×1
1111 ×1	**1112** ×1
1113 ×1	**1500** ×1
1515 ×1	**2005** ×1
2006 ×2	**2021** ×1
2058 ×1	**2098** ×1

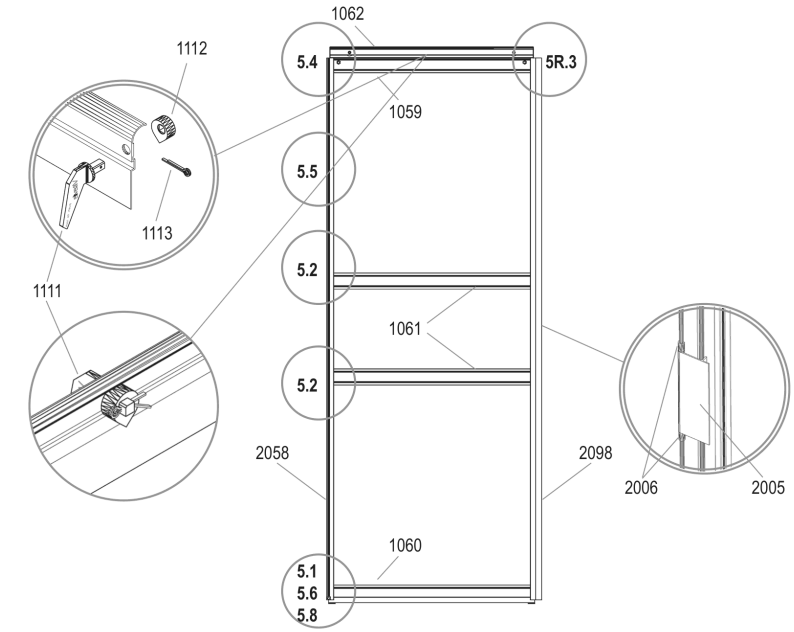

Vitavia drawing 5R. The circled numbers match the pictures below.

INSTALLER TIP

If the door binds or jumps its track, the frame is almost certainly not square. Check the frame before you force the door.

WATCH OUT

Never stand the assembled door on gliders 1014; this damages them. Use inside side bar 2098 for the right-hand door and 2099 for the left-hand door.

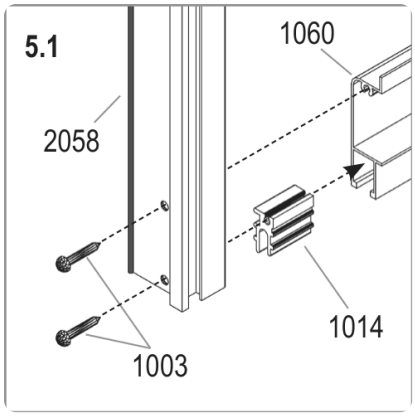

5.1

Push a door glider 1014 onto each end of bottom door bar 1060. Screw outside side bar 2058 to it with screws 1003.

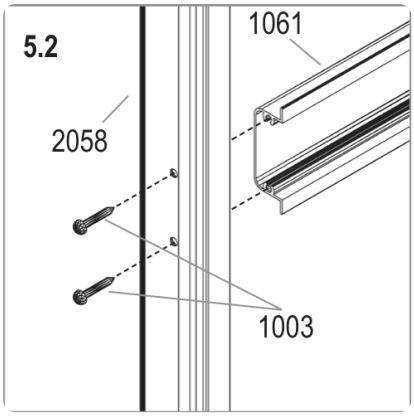

5.2

Screw middle bar 1061 to the side bars with screws 1003.

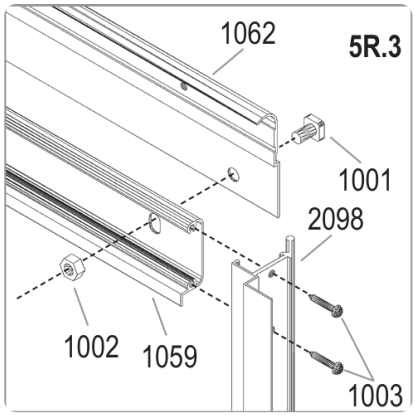

5R.3

Bolt door top bar 1062 to upper bar 1059 with bolt 1001 and nut 1002. Screw inside side bar 2098 on with screws 1003.

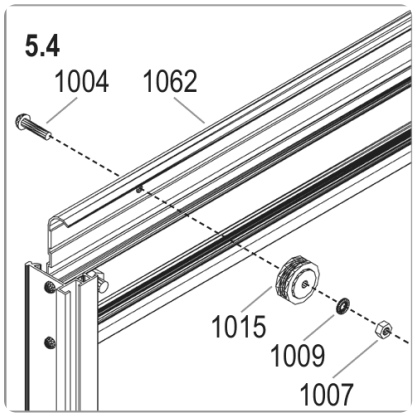

5.4

Fix both door rollers 1015 to top bar 1062 with bolt 1004, washer 1009 and nut 1007.

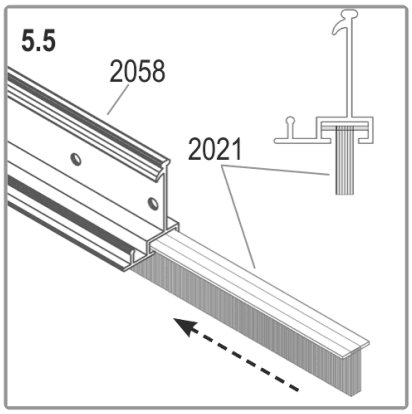

5.5 OUTSIDE VIEW

Slide brush seal 2021 into outside side bar 2058. Cut the seal to length.

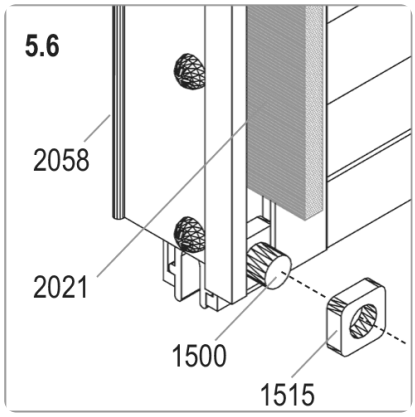

5.6

Slide bolt 1500 into the bottom of the brush seal channel and secure it with nut 1515. This stops the seal sliding out.

DO THIS NOW

Loosen door runner supports 2043 before you hang the door.

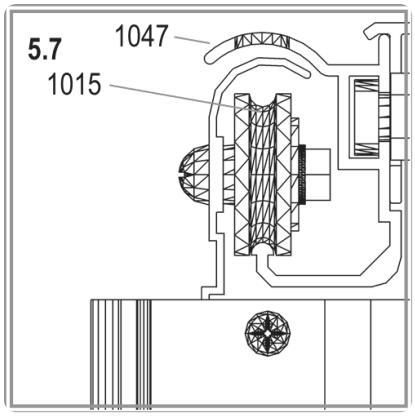

5.7 OUTSIDE VIEW

Work from the outside, lift the door and hang rollers 1015 in door runner bar 1047.

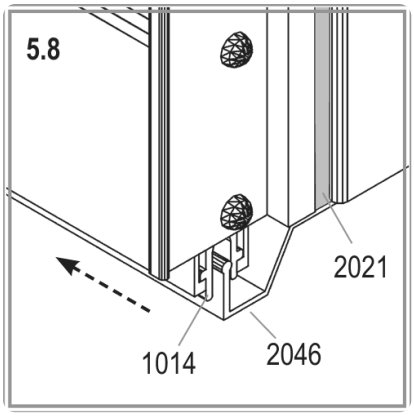

5.8 OUTSIDE VIEW

Check from the outside that door gliders 1014 also run in the bottom track of bar 2046.

STEP 5L

5L Fit the left-hand door

Greenhouse Stores

Build and hang the second door, then adjust both doors together.

YOU NEED

1001 ×2	1002 ×2
1003 ×16	1004 ×2
1007 ×2	1009 ×2
1014 ×2	1015 ×2
1059 ×1	1060 ×1
1061 ×2	1062 ×1
1111 ×1	1112 ×1
1113 ×1	1500 ×1
1515 ×1	2001 ×1
2021 ×1	2058 ×1
2099 ×1	

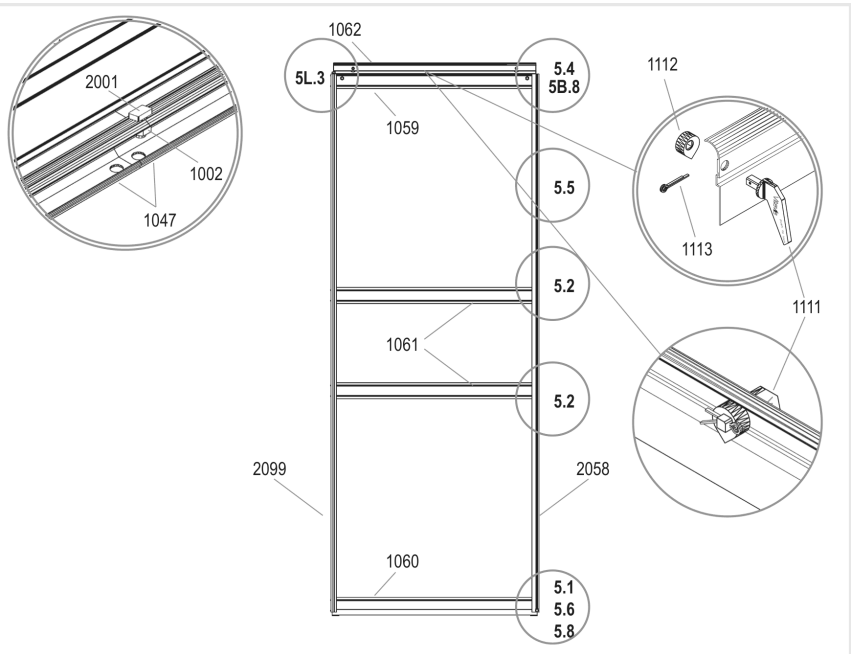

Vitavia drawing 5L. The circled numbers match the pictures below.

INSTALLER TIP

Hang the left-hand door as you hung the right-hand door. Adjust both together until they meet and slide freely.

WATCH OUT

Never stand an assembled door on gliders 1014; this damages them.

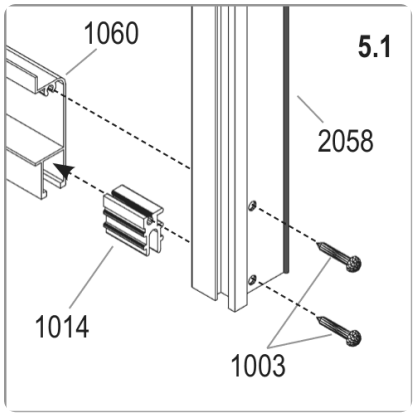

5.1

Push a door glider 1014 onto each end of bottom door bar 1060. Screw outside side bar 2058 to it with screws 1003.

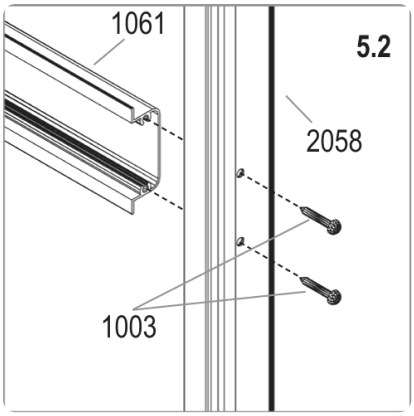

5.2

Screw middle bar 1061 to the side bars with screws 1003.

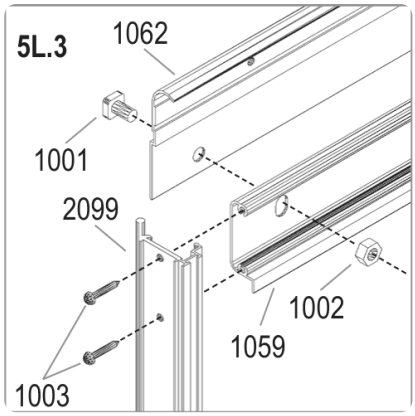

5L.3

Bolt door top bar 1062 to upper bar 1059 with bolt 1001 and nut 1002. Screw inside side bar 2099 on with screws 1003.

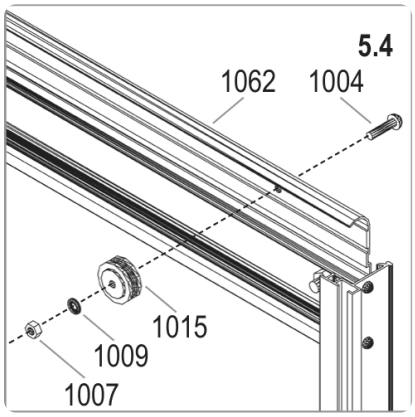

5.4

Fix both door rollers 1015 to top bar 1062 with bolt 1004, washer 1009 and nut 1007.

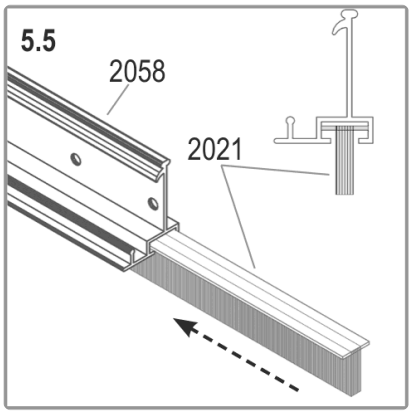

5.5 OUTSIDE VIEW

Slide brush seal 2021 into outside side bar 2058. Cut the seal to length.

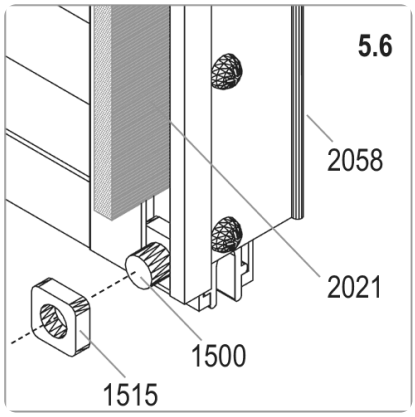

5.6

Slide bolt 1500 into the bottom of the brush seal channel and secure it with nut 1515. This stops the seal sliding out.

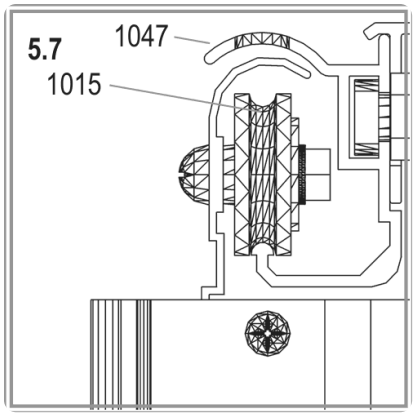

5.7 OUTSIDE VIEW

Work from the outside, lift the door and hang rollers 1015 in door runner bar 1047.

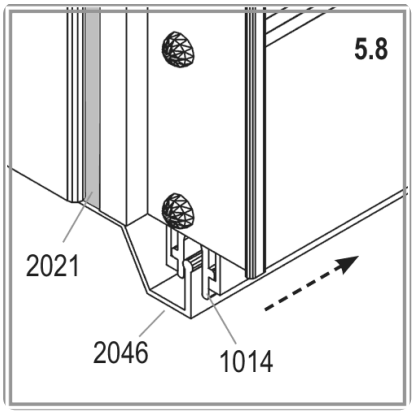

5.8 OUTSIDE VIEW

Check from the outside that door gliders 1014 also run in the bottom track of bar 2046.

DO THIS NOW

Connect door fixers 1111, 1112, 1113 as shown; insert bolt 2001 at the join between runner bars 1047. Fit nut-and-bolt stops at both runner ends; adjust both doors until they slide freely.

STEP 6

6 Fit the roof vents

Build two roof vents for the 6700, or four for the 8300, 9900 and 11500.

YOU NEED

- **1001** ×8
- **1002** ×8
- **1006** ×12
- **1019** ×2
- **1063** ×2
- **1064** ×2
- **1065** ×4
- **1066** ×2
- **1067** ×2
- **2016** ×4

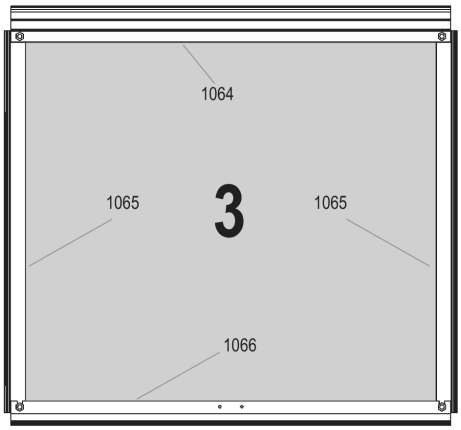

	Art. No.	mm	6700	8300	9900	11500
3	3679491	600 x 544	2	4	4	4

Vitavia drawing 6. The circled numbers match the pictures below.

INSTALLER TIP

Fit the slam bar, vent sill 1063, flat edge up, with its grooved lip facing down towards the pane below. Recheck its position if that pane will not sit snugly.

Watch: Build and fit the window

Scan with your phone camera. Vitavia video.

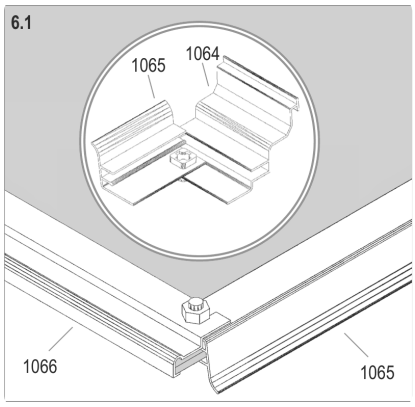

6.1

For glass up to 4 mm thick, join vent side bars 1065 and top bar 1064 as shown here.

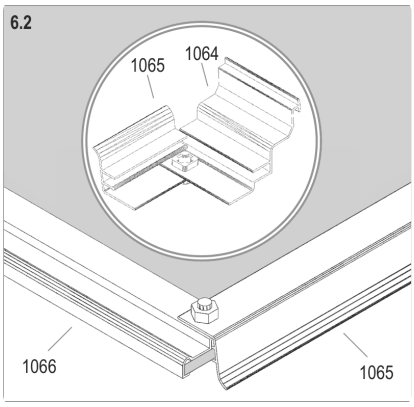

6.2

For glass 4 mm or thicker, join vent side bars 1065 and top bar 1064 as shown here instead.

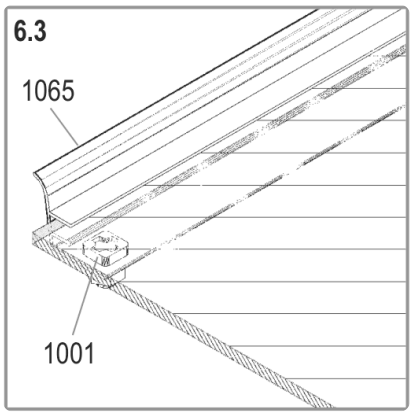

6.3 OUTSIDE VIEW

Insert bolts for bottom bar 1066 into the prepared holes; slide the glass into side bar tracks 1065. Fit bottom bar 1066 and check the vent is square before you tighten the bolts.

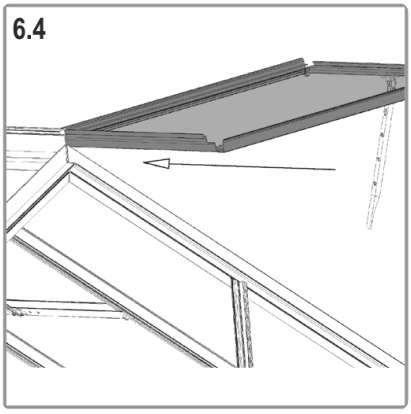

6.4 OUTSIDE VIEW

Hook the vent into the ridge bar from one end of the greenhouse.

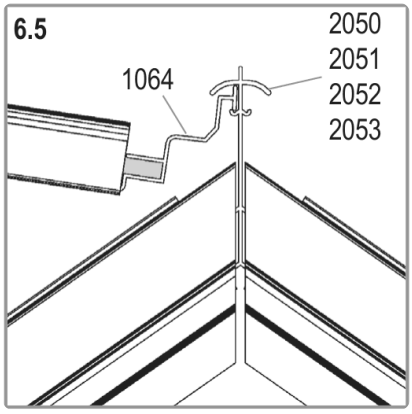

6.5 OUTSIDE VIEW

Hook vent top bar 1064 over your ridge bar (2050, 2051, 2052 or 2053).

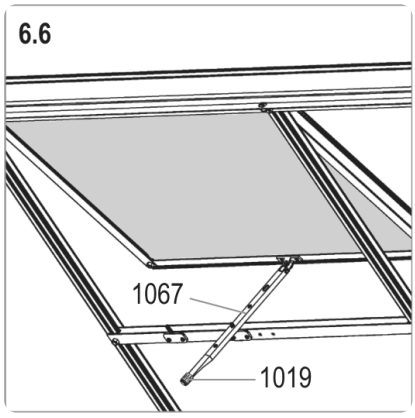

6.6

Slide the vent to your chosen position. Push plastic cap 1019 onto the end of window opener 1067.

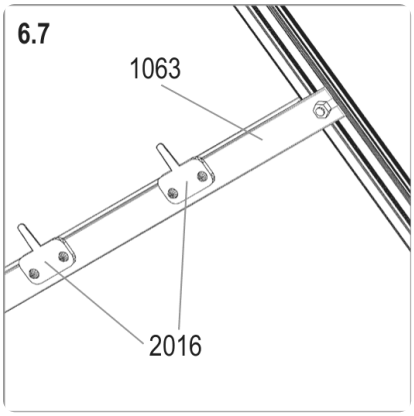

6.7

Fix vent sill 1063 to the extra bolts in the roof bars. Screw both window fixers 2016 onto vent sill 1063 with screws 1006.

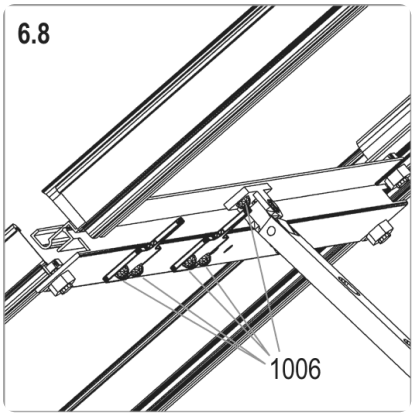

6.8

Screw window opener 1067 to vent bottom bar 1066 with screws 1006.

STEP 7

7 Fit the glazing

Fit the rubber seal before any glass, then work upwards from the bottom.

Your toughened glass

Your toughened glass comes as full panes, listed in the table below. Use the plan below for pane positions, not the drawing above. Join your gable glass with plastic H profiles where glass meets glass, replacing glass retaining clips 1012. Fit each H strip with its longest arm inside and uppermost.

PANE	SIZE (MM)	JUPITER 6700
1	610 × 1507	14
2	610 × 1524	6
3	610 × 985	2
4	600 × 544	2
5	610 × 610	4
6	600 × 434 × 8	4
7	610 × 451 × 27	4
8	610 × 540	2
8a	610 × 588	2
9	610 × 447	2
	Total panes	**42**
	Plastic H profiles	6

Jupiter/Uranus & Phoenix

Glass plan for full pane toughened glass

Use plastic 'H' profiles for joining glass in the gables.

NB: The 'H' profiles replace the Glass Retaining Clips 1012. Please note when fitting the 'H' strip the longest arm of the profile should be located inside and uppermost.

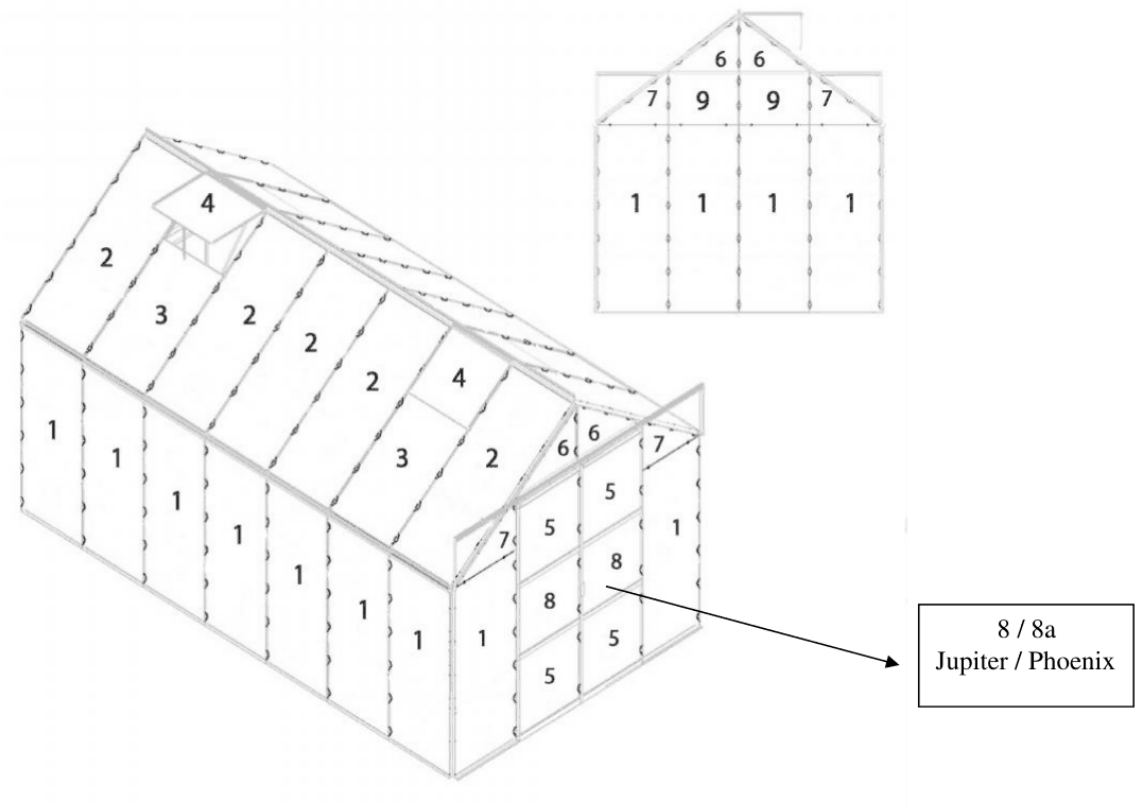

	Jupiter/Phoenix	6700	8300	9900	11500
1	610 x 1507mm	14	16	18	20
2	610 x 1524mm	6	6	8	10
3	610 x 985mm	2	4	4	4
4	600 x 544mm	2	4	4	4
5	610 x 610mm	4	4	4	4
6	600 x 434 x 8mm	4	4	4	4
7	610 x 451 x 27mm	4	4	4	4
8	610 x 540mm	2	2	2	2
8a	610 x 588mm	2	2	2	2
9	610 x 447mm	2	2	2	2
	Total	**42**	**48**	**52**	**56**
	Plastic 'H' profiles	6	6	6	6

Vitavia's toughened glass plan. Pane numbers match the table.

YOU NEED

1011 ×328

1020 ×1

INSTALLER TIP

We recommend soaking the whole seal reel in hot soapy water first; it softens and presses on more easily. Check the glazing layout if a pane looks too big; it usually belongs elsewhere.

WATCH OUT

Never force a pane; this cracks glass. If it will not seat, correct the unsquare frame first.

Watch: Fitting the glazing rubber
Scan with your phone camera. Vitavia video.

Watch: Glazing the roof with toughened glass
Scan with your phone camera. Vitavia video.

Watch: Bar capping (toughened glass and polycarbonate)
Scan with your phone camera. Vitavia video.

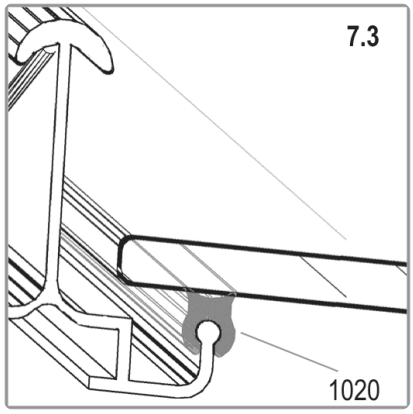

7.3 OUTSIDE VIEW

Before you fit any glass, press rubber glazing seal 1020 onto the aluminium profiles. Cut it to length.

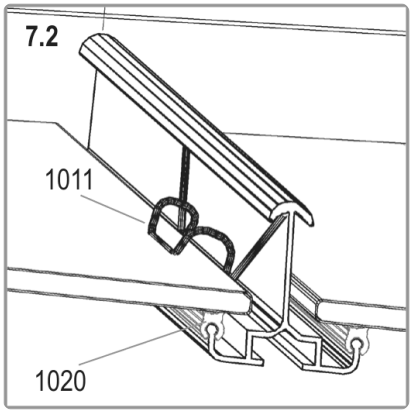

7.2 OUTSIDE VIEW

Start roof glazing at the eave. Fix the first pane with glazing spring clips 1011.

DO THIS NOW

Start side glazing at the bottom and work upwards. For polycarbonate sheets, follow the instructions packed with the sheets.

LAST JOBS

Finish and look after it

Finish

- [ ] Anchor the greenhouse; this is not optional. A greenhouse this size catches a lot of wind.
- [ ] Seal the edges with neutral silicone if you wish. Silicone is not supplied.
- [ ] Stick the warning label inside the greenhouse.
- [ ] Stick the model label onto door top bar 1062. You will need it to order spare parts.
- [ ] Keep this guide somewhere safe.

Looking after it

- [ ] Shut both doors and all vents in high winds.
- [ ] Clear the roof or support it in heavy snow. Heat the greenhouse in winter.
- [ ] Wash the greenhouse occasionally with a mild detergent that does not attack aluminium or the glazing clips.
- [ ] Keep the upper and lower door tracks clean so grit does not build up.
- [ ] Add the greenhouse to your home insurance. Check local building rules about where you can put it.

Drawings reproduced from the Vitavia assembly instructions (Vitavia manual 001.02.1208 (Jupiter, printed as Uranus)). Greenhouse Stores, greenhousestores.co.uk.