Greenhouse Stores

ASSEMBLY GUIDE

Phoenix 8300

8x10 Vitavia greenhouse

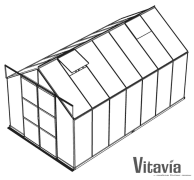

12
steps, base first

2
people needed

3176+70 mm × 2564 mm
base size (A × B)

Online version with every size: www.greenhousestores.co.uk/instructions/vitavia-phoenix/

The build at a glance

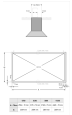

0
Foundation and steel base

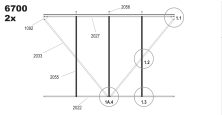

1
Build both side frames

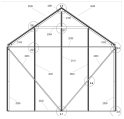

2
Build the back gable

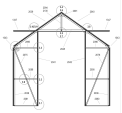

3
Build the door gable

4
Join and square the frame

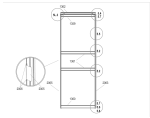

5L
Fit the left-hand door

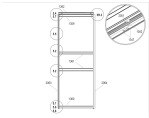

5R
Fit the right-hand door

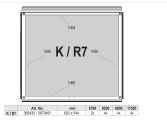

6
Build and fit roof vents

7A
Polycarbonate roof with glass sides

7B
Large 3 mm glass panes

7C
Small overlapping horticultural glass panes

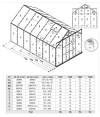

7D
Polycarbonate all round

Drawings: Vitavia (Vitavia manual 060.01.1511 (Phoenix)). Words and layout: Greenhouse Stores, greenhousestores.co.uk. Keep this guide with your greenhouse.

READ THIS FIRST

Before you start

Six golden rules

1. Build frames loose; tighten only when the whole greenhouse stands square on its base.
2. Measure both diagonals; they must be equal.
3. Never overtighten nuts 1002: maximum 3 Nm. Overtightening strips aluminium and cracks glass.
4. Fit extra bolts when instructed; you cannot add them after bar ends are capped.
5. Build with two people.
6. Always anchor your greenhouse. An unanchored greenhouse can blow away.

Get ready

- [ ] Read the whole guide once before you start.
- [ ] Gather flat/PH2 screwdrivers, 10 mm socket spanner/wrench, 10 mm combination spanner, knife, tape measure, spirit level. Set cordless drill adjustable torque low.
- [ ] Wear gloves, safety glasses, sturdy shoes and a hat. Aluminium edges are sharp. Clear up broken glass straight away.
- [ ] Open one bundle at a time and keep opened bundles apart. Mixed bundles are the main cause of lost-part searches.
- [ ] Check every part against the parts check pages. Contact Greenhouse Stores before you begin if anything is missing.
- [ ] Read single-frame drawings as views from inside the greenhouse. Read double-frame drawings as views from outside.
- [ ] Choose a sunny spot with as much shelter from wind as possible.

Read next: 10 common greenhouse installation mistakes (and how to avoid them)

Single frame: inside view Double frame: outside view

BEFORE STEP 1

Parts check

Open one bundle at a time. Tick each part as you find it. The number in green is how many your Phoenix 8300 should have.

Bars and profiles

1020
Glazing seal (reel)
105000 mm **×1**

1043
170 mm **×4**

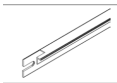

1063
Window sill
635 mm **×4**

1064
Top bar
602 mm **×4**

1065
Side bar
520 mm **×8**

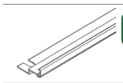

1066
Bottom bar
602 mm **×4**

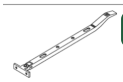

1067
Window opener
295 mm **×4**

1092
Corner plate
120 mm **×12**

1347
Door runner bar
1257 mm **×2**

1359
Upper bar
621 mm **×2**

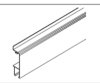

1360
Door bar
621 mm **×2**

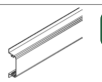

1361
621 mm **×4**

1362
Door bar
613 mm **×2**

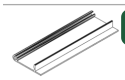

2005
100 mm **×1**

2022
2484 mm **×1**

2023
3106 mm **×2**

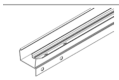

2028
3106 mm **×2**

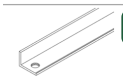

2033
Cross brace
1898 mm **×10**

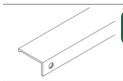

2035
Cross brace
2476 mm **×1**

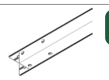

2036
1511 mm **×4**

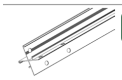

2039
1535 mm **×2**

2040
1535 mm **×2**

2041
Vertical bar
1963 mm **×2**

2042
Vertical bar
1963 mm **×2**

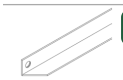

2043
Door runner support
416 mm **×2**

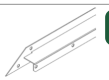

2048
Horizontal bar
1318 mm **×1**

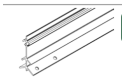

2051
Ridge bar
3106 mm **×1**

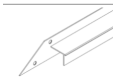

2054
1318 mm **×1**

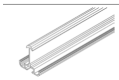

2055
Glazing bar
1511 mm **×16**

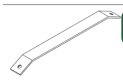

2056
Corner brace
255 mm **×8**

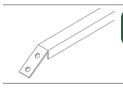

2057
Roof brace
1184 mm **×4**

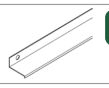

2060
633 mm **×1**

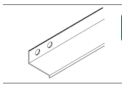

2061
633 mm **×1**

2062
Bottom track
2544 mm **×1**

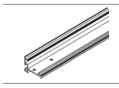

2063
Door bar
1971 mm **×2**

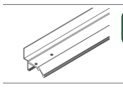

2064
Inside side bar
1971 mm **×1**

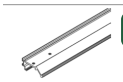

2065
Inside side bar
1971 mm **×1**

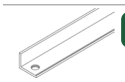

2075
1575 mm **×1**

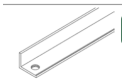

2076
1575 mm **×1**

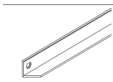

2089
619 mm **×1**

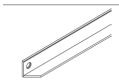

2090
619 mm **×1**

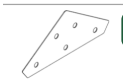

2091
175 mm **×2**

2094	426 mm	×1
2096	619 mm	×2
2100	425 mm	×2
2101	Vertical bar 1963 mm	×1
5021	Door seal 1991 mm	×2
9101	Anchor leg 455 mm	×2
9103	125 mm	×2
9107	Anchor leg 455 mm	×2
9116	2544 mm	×1
9120	1583 mm	×4
9142	Base length 663 mm	×1
9143	Base length 663 mm	×1
9144	Anchor leg 455 mm	×1
9145	Anchor leg 455 mm	×1

Fixings and small parts

1001	Bolt M6 × 12	×278
1002	Nut M6	×285
1003	Screw 3.5 × 16	×32
1005	Bolt M6 × 40	×2
1006	Screw 3.5 × 6	×24
1007	Nut M4	×4
1009	Washer Ø8/4	×4
1011	Glazing spring clip 70	×396
1012	Glass retaining clip 11	×112
1014	Door glider 20	×4
1015	Door roller Ø22	×4
1017	End protector 46	×4
1018	End protector 43.7	×8
1019	Plastic cap 15	×4
1304	Bolt M4 × 18	×4
1310	Spacer 30.4	×2
1500	Bolt M6 × 5	×2
1515	Nut M6	×2
2001	Corner bolt M6 × 12	×1
2006	10	×2
2007	Bolt M6 × 22	×4
2016	Window fixer 40	×8
2092	37	×6
2093	56	×1
5001	33	×1
5002	33	×1
6060	Washer Ø12/6	×2
9002	Clip 19	×21
9004	Washer Ø16/6.5	×8
9105	50	×2

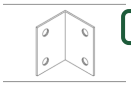

9106
50 **×2**

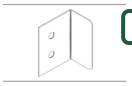

9146
57 **×2**

STEP 0

0 Foundation and steel base

Greenhouse Stores

Build your zinc-coated steel base first, then place it on a square, level foundation.

YOU NEED

1001 ×26	**1002** ×26	**9004** ×8	**9101** ×2	**9103** ×2
9105 ×2	**9106** ×2	**9107** ×2	**9116** ×1	**9142** ×1
9143 ×1	**9144** ×1	**9145** ×1	**9146** ×2	**9120** ×4

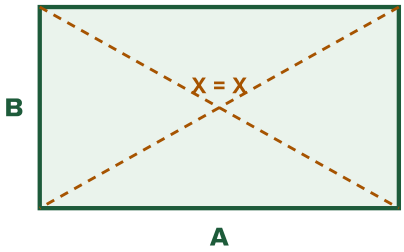

	PHOENIX 8300
A	3176+70 mm
B	2564 mm

INSTALLER TIP

Check both diagonals twice before you put the steel base on the foundation. On a greenhouse this size, a small error at the base grows as you build.

WATCH OUT

Check the 1218 mm doorway gap before you continue. Make the base square and level, or the frame and glass will not fit correctly.

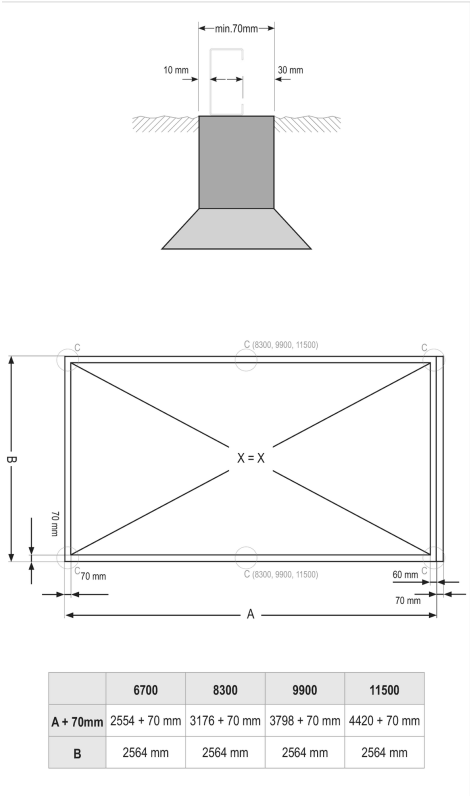

	6700	8300	9900	11500
A + 70mm	2554 + 70 mm	3176 + 70 mm	3798 + 70 mm	4420 + 70 mm
B	2564 mm	2564 mm	2564 mm	2564 mm

Vitavia drawing 0A. The circled numbers match the pictures below.

0.1

Make the base exactly square and level, with matching diagonal measurements, marked X = X. Take the foundations below frost level.

0.2

For stone or concrete foundations, follow sizes A and B, including the length plus 70 mm shown for A. Make the foundation at least 70 mm wide beneath the base.

0.3

Make anchor-leg holes at points C; the two middle points apply only to 8300, 9900 and 11500. Fill these holes with concrete only after you completely assemble the greenhouse.

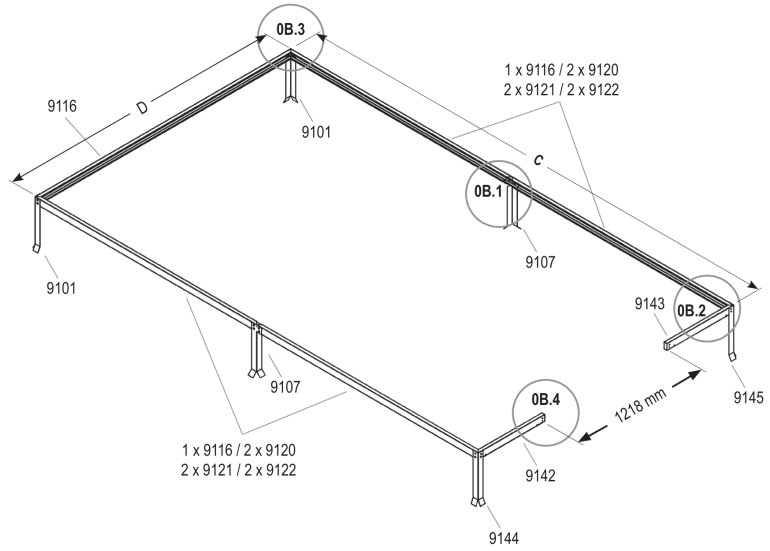

	6700	8300	9900	11500
C	2544 mm	3166 mm	3788 mm	4410 mm
D	2544 mm	2544 mm	2544 mm	2544 mm

Vitavia drawing 0B. The circled numbers match the pictures below.

DO THIS NOW

Assemble the supplied zinc-coated steel base with bolts 1001 and nuts 1002 to sizes C and D. Use anchor legs 9101, 9107, 9144 and 9145, as the manufacturer recommends.

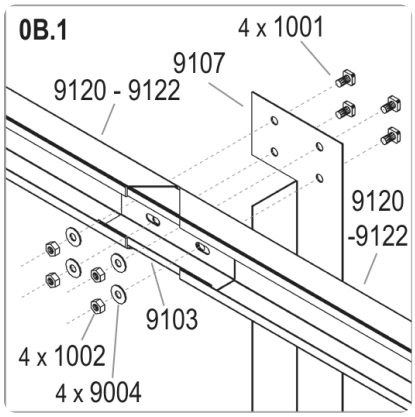

0B.1

For 8300, 9900 and 11500, join your long-side lengths (9120, 9121 or 9122) with connector 9103 and anchor leg 9107. Use 4 bolts 1001, 4 nuts 1002 and 4 washers 9004 at each joint.

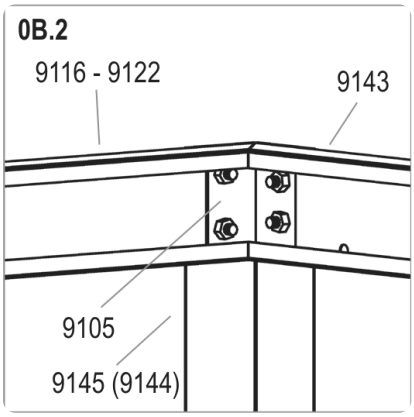

0B.2

Join each long side to front base length 9143 with bracket 9105 and anchor leg 9145. At the other front corner, use front base length 9142 and anchor leg 9144.

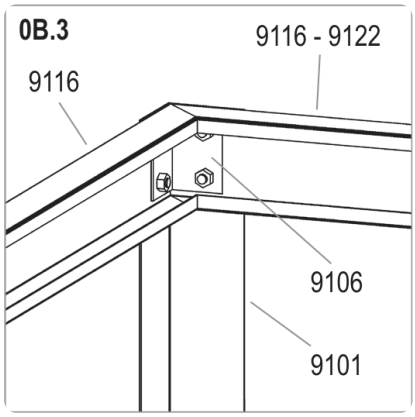

0B.3

Join back length 9116 to each long side with bracket 9106 and anchor leg 9101, as shown.

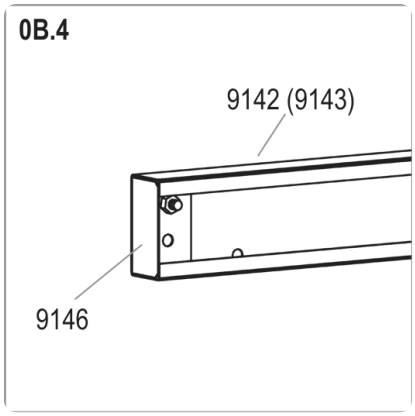

0B.4

Fit end piece 9146 into the open ends of front base lengths 9142 and 9143, as shown.

DO THIS NOW

Leave exactly 1218 mm between the inside ends of front base lengths 9142 and 9143 for the doorway.

DO THIS NOW

Bend anchor-leg ends and place the base; delay concrete until full assembly. Only on very windy, exposed sites, drill and bolt together the greenhouse bottom profile and steel base.

STEP 1

1 Build both side frames

Build two identical side frames flat on the ground, and leave every bolt loose.

YOU NEED

- **1001** ×48
- **1002** ×48
- **1092** ×4
- **2023** ×2
- **2028** ×2
- **2033** ×4
- **2055** ×8
- **2056** ×8
- **2092** ×4

8300
2x

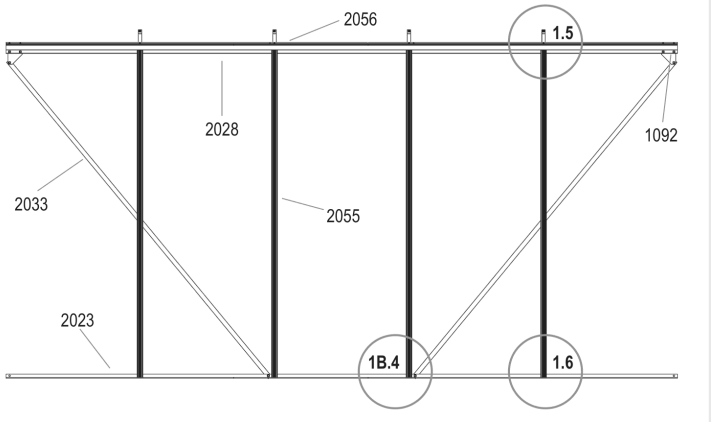

Vitavia drawing 1A. The circled numbers match the pictures below.

INSTALLER TIP

Lay the parts on a blanket or lawn to protect the finish. Leave every nut loose so the frames can flex during step 4.

WATCH OUT

Insert all extra bolts now. Once you close the bar ends, you cannot add them.

Watch: Build the sides

Scan with your phone camera. Vitavia video.

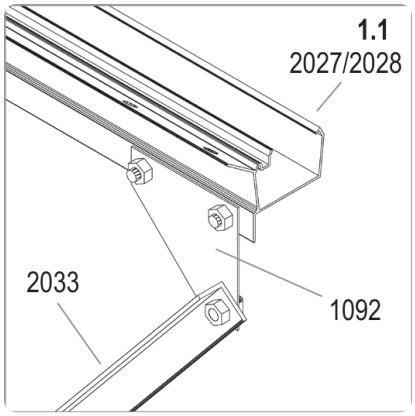

1.1

Loosely fit corner plate 1092 where your eave bar (2027, 2028, 2029 or 2030) meets cross brace 2033. Leave its bolts loose for the gable connections in step 4.

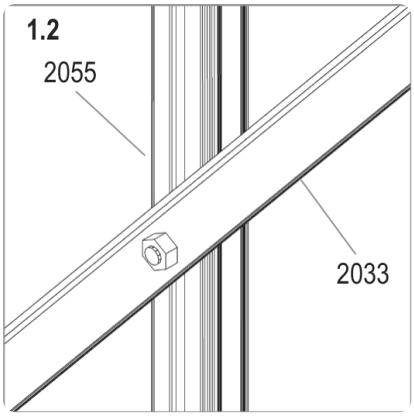

1.2

Insert one extra bolt into each outer bar 2055 for cross brace 2033 where it crosses the bar.

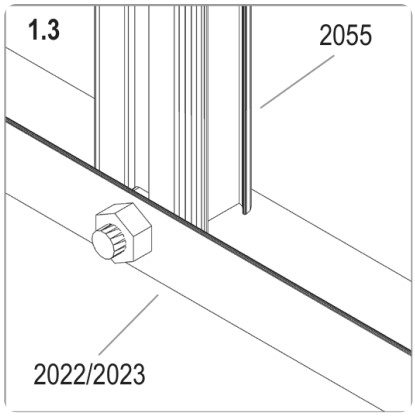

1.3

Bolt the bottom of each vertical bar 2055 to your sill bar (2022, 2023, 2024 or 2025).

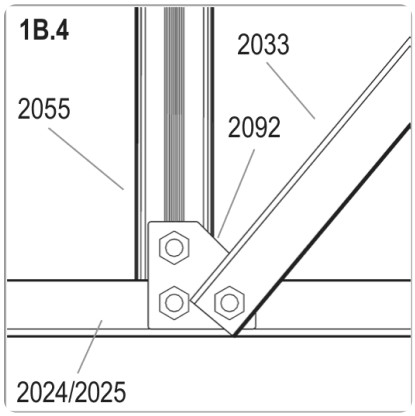

1B.4

For 8300, 9900 and 11500, join cross brace 2033 and vertical bar 2055 to your sill bar (2023, 2024 or 2025). Use plate 2092, as shown.

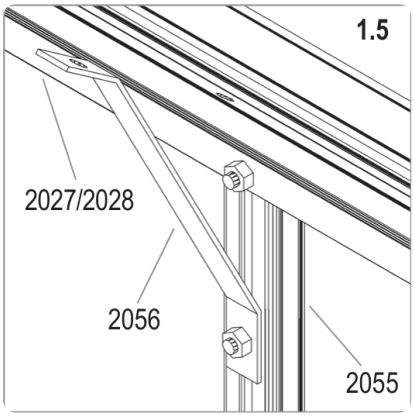

1.5

Insert an extra bolt into every vertical bar 2055 for corner brace 2056. This brace connects your eave bar (2027, 2028, 2029 or 2030) to the vertical bar later.

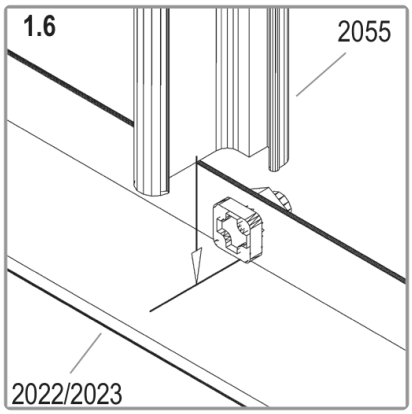

1.6 OUTSIDE VIEW

Insert the bolt into your sill bar (2022, 2023, 2024 or 2025) channel at the foot of vertical bar 2055. Follow the arrow in this outside view.

STEP 2

2 Build the back gable

Greenhouse Stores

Build the plain back gable flat on the ground, and leave every bolt loose.

YOU NEED

1001 ×32	1002 ×32
1043 ×2	2022 ×1
2033 ×2	2035 ×1
2036 ×2	2039 ×1
2040 ×1	2041 ×1
2042 ×1	2054 ×1
2091 ×1	2093 ×1
2100 ×1	2101 ×1

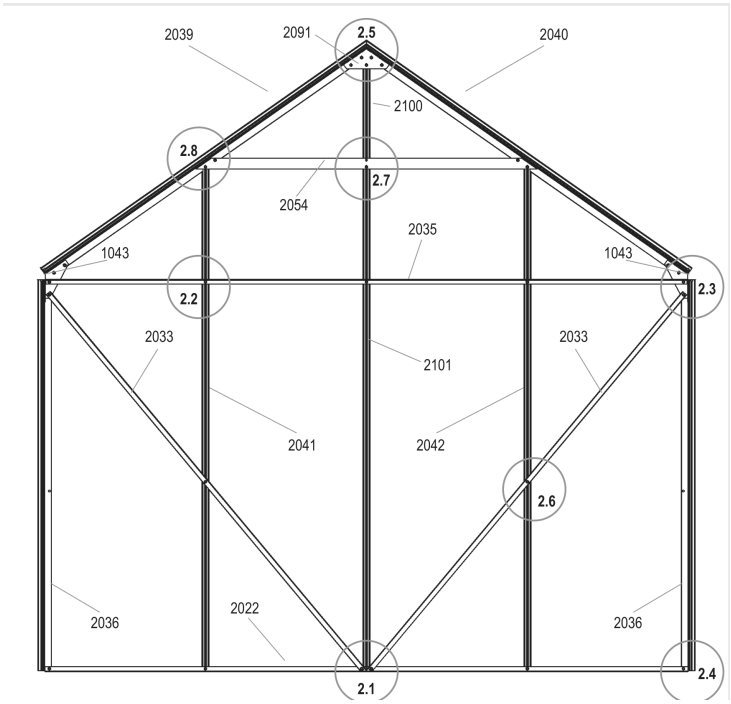

Vitavia drawing 2. The circled numbers match the pictures below.

INSTALLER TIP

Build from the bottom up. Slide each extra bolt into its channel before you fit the bar above it.

WATCH OUT

Insert the extra bolts now. Without them, you must take the gable apart to fit the cross braces in step 4.

Watch: Rear gable end

Scan with your phone camera. Vitavia video.

DO THIS NOW

Insert two extra bolts into each vertical bar 2041 and 2042 for the cross braces in 2.2 and 2.6. Insert only one extra bolt into vertical bar 2101.

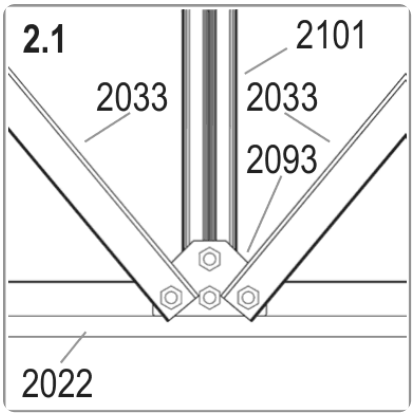

2.1

Join both cross braces 2033 and vertical bar 2101 to sill bar 2022 with plate 2093, as shown.

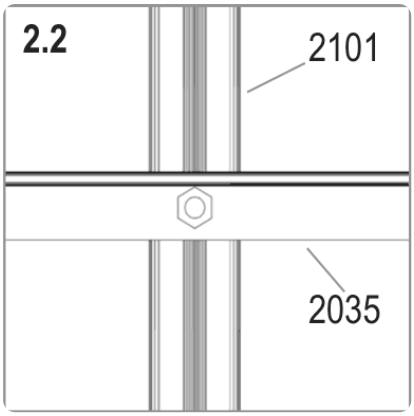

2.2

Bolt cross brace 2035 to vertical bar 2101, as shown.

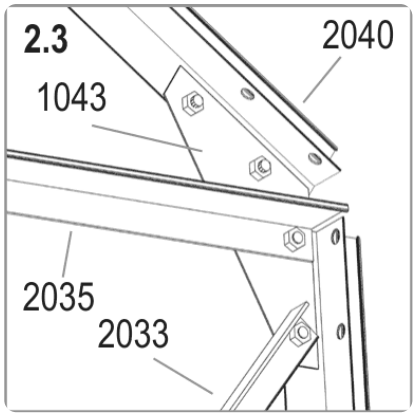

2.3

At each top corner, join your roof bar (2040 or 2039) and cross braces 2035 and 2033 with corner plate 1043.

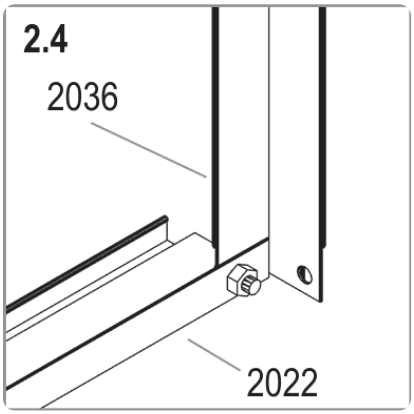

2.4

Bolt bar 2036 to sill bar 2022 at each bottom corner.

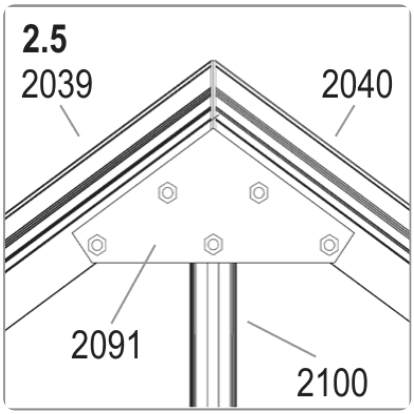

2.5

Join roof bars 2039 and 2040 to the top of upright 2100 with plate 2091.

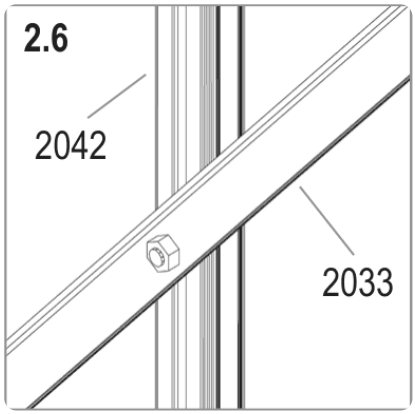

2.6

Bolt cross brace 2033 to vertical bar 2042 where they cross.

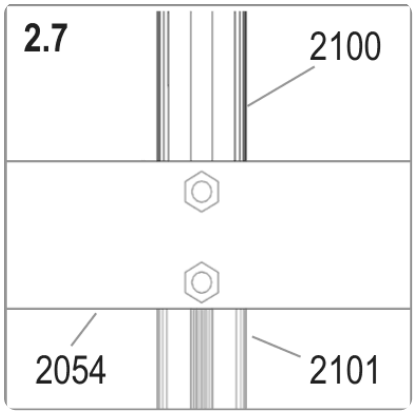

2.7

Join upright 2100 and vertical bar 2101 to horizontal bar 2054 with two bolts.

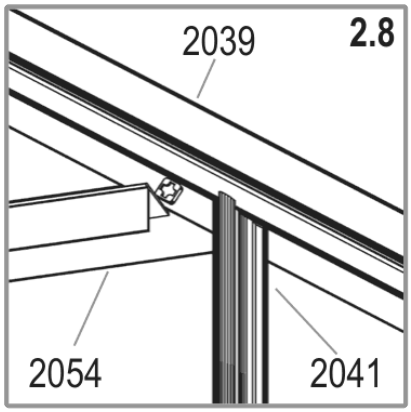

2.8 OUTSIDE VIEW

Join horizontal bar 2054 and vertical bar 2041 to roof bar 2039, as shown from outside.

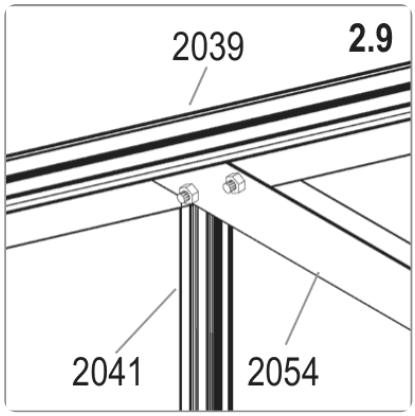

2.9

Check the same joint from inside, and join horizontal bar 2054 and vertical bar 2041 beneath roof bar 2039.

STEP 3

3 Build the door gable

Build the front gable flat on the ground for your double sliding door, and leave every bolt loose.

YOU NEED

1001 ×41	**1002** ×41
1043 ×2	**1347** ×2
2036 ×2	**2039** ×1
2040 ×1	**2041** ×1
2042 ×1	**2048** ×1
2060 ×1	**2061** ×1
2075 ×1	**2076** ×1
2089 ×1	**2090** ×1
2091 ×1	**2092** ×2
2094 ×1	**2096** ×2
2100 ×1	**5001** ×1
5002 ×1	

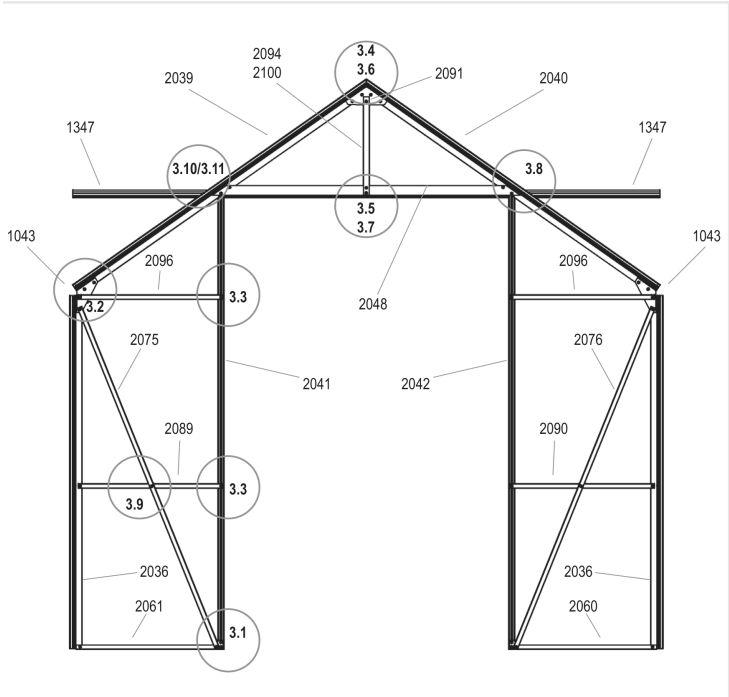

Vitavia drawing 3. The circled numbers match the pictures below.

INSTALLER TIP

Each door runner bar 1347 carries one of the two sliding doors.

WATCH OUT

If parts will not line up, check for upside-down or reversed bars before you force anything.

Watch: Door frame (front gable)

Scan with your phone camera. Vitavia video.

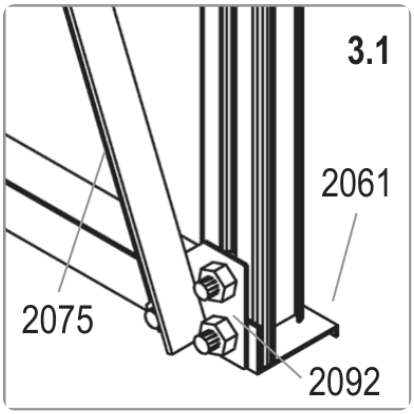

3.1

Join cross brace 2075 to base bar 2061 at the foot of door post 2041 with plate 2092. Fit one plate 2092 on each side of the doorway.

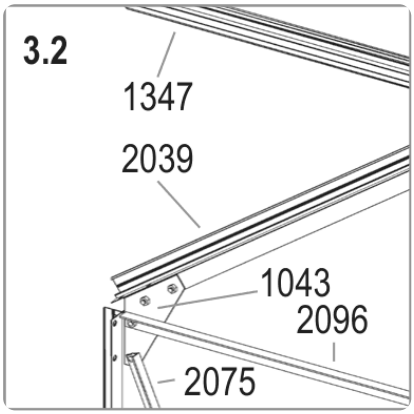

3.2

Join roof bar 2039, bar 2096 and cross brace 2075 with corner plate 1043 at each top corner. Position door runner bar 1347 above, as shown.

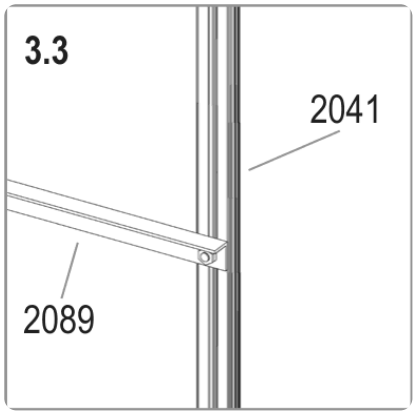

3.3

Bolt bar 2089 to door post 2041. Insert two extra bolts into each vertical bar 2041 and 2042.

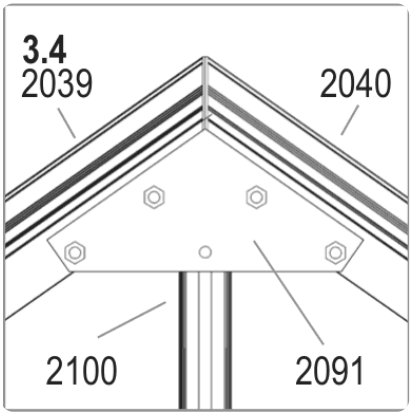

3.4

Join roof bars 2039 and 2040 to the top of upright 2100 with plate 2091.

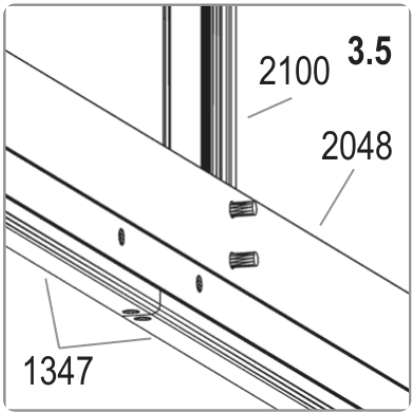

3.5

Join upright 2100 to horizontal bar 2048, with door runner bar 1347 below, as shown.

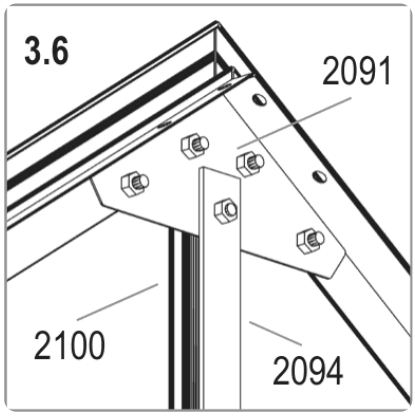

3.6

Join upright 2100 and bar 2094 with plate 2091, as shown.

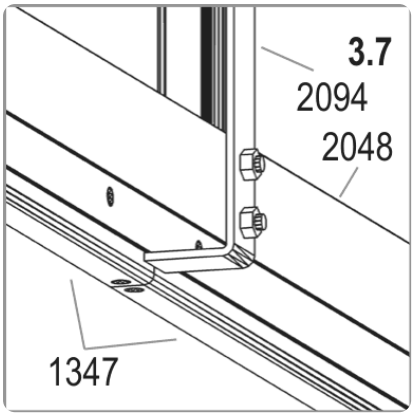

3.7

Bolt bar 2094 to horizontal bar 2048, with door runner bar 1347 below.

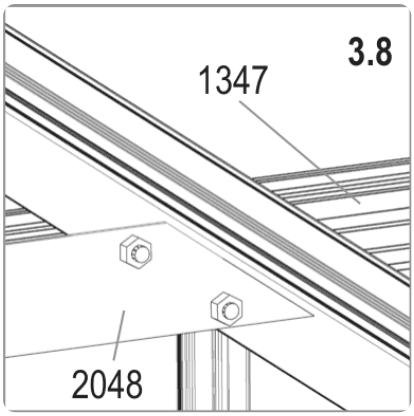

3.8

Join door runner bar 1347 to horizontal bar 2048, as shown.

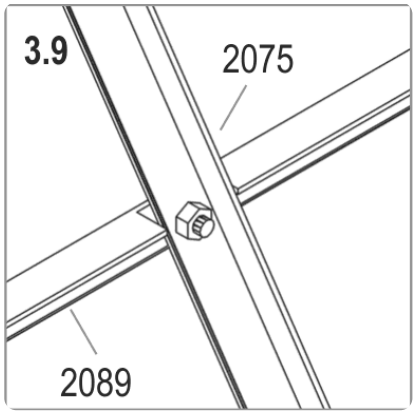

3.9

Bolt cross brace 2075 to bar 2089 where they cross.

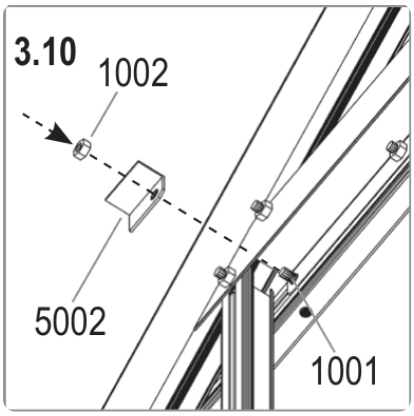

3.10

Fit part 5002 onto bolt 1001 and secure it with nut 1002, as the arrow shows.

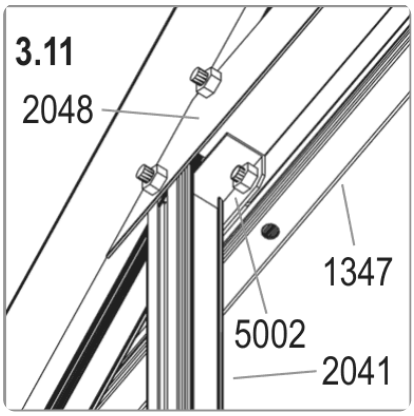

3.11

Position part 5002 where door post 2041, horizontal bar 2048 and door runner bar 1347 meet. Connect parts 5001 and 5002 with a nut, as shown in 3.10 and 3.11.

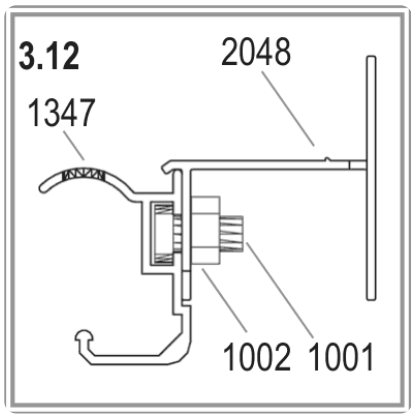

3.12 OUTSIDE VIEW

Loosely connect each door runner bar 1347 to horizontal bar 2048 from outside, with three bolts and two nuts.

STEP 4

4 Join and square the frame

Greenhouse Stores

Work with another person to join the frames and lift the greenhouse onto the prepared steel base.

YOU NEED

1001 ×86	**1002** ×92	**1005** ×2	**1092** ×8	**1310** ×2
2043 ×2	**2051** ×1	**6060** ×2	**1017** ×4	**1018** ×8
2007 ×4	**2033** ×4	**2055** ×8	**2057** ×4	**2062** ×1
9002 ×21				

INSTALLER TIP

Count the circled extra bolts on every roof bar before you fit any end protector. Use the counts for your greenhouse size.

WATCH OUT

Keep all connections loose until the greenhouse is on its steel base and square. You cannot adjust the frame after you fit the glass.

Watch: Front and roof bars

Scan with your phone camera. Vitavia video.

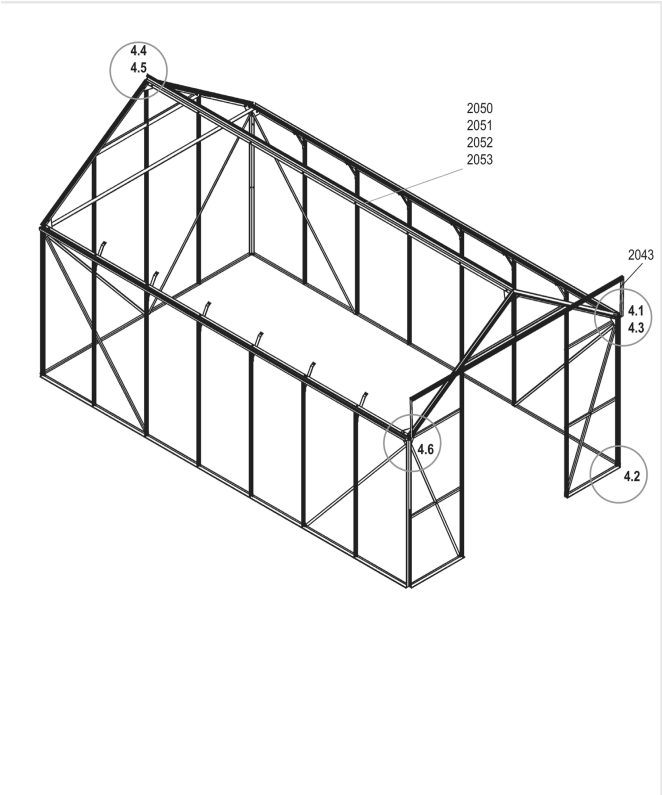

Vitavia drawing 4A. The circled numbers match the pictures below.

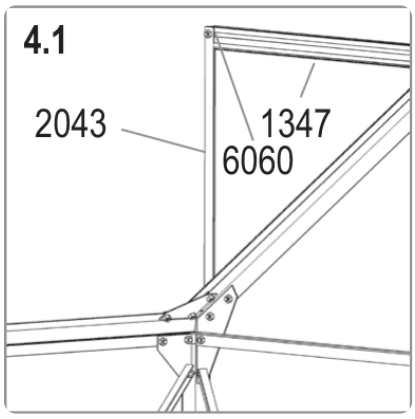

4.1

Bolt the side frames to the gable ends, as shown in 4.1 and 4.2. Connect door runner support 2043 to door runner bar 1347 with washer 6060.

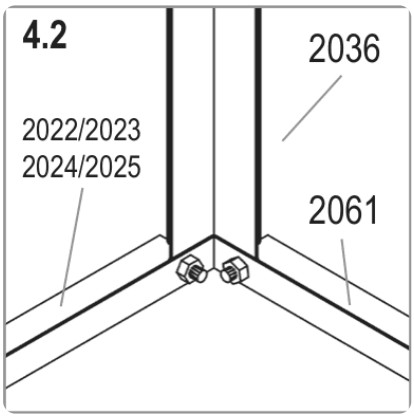

4.2

Join your sill bar (2022, 2023, 2024 or 2025) to bar 2036 and base bar 2061 at the bottom corners.

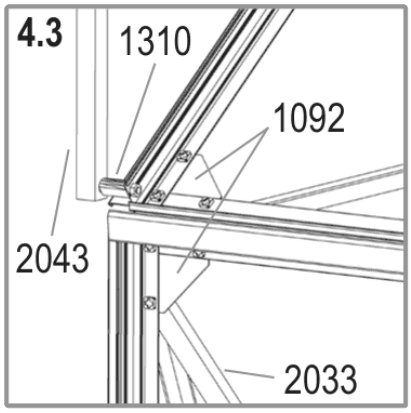

4.3 OUTSIDE VIEW

Loosely connect corner plate 1092 above the eaves. Position door runner support 2043 with spacer 1310 at this corner, as shown from outside.

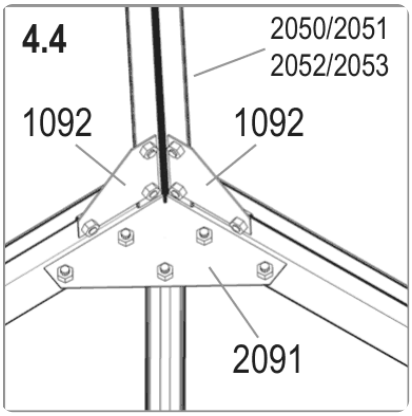

4.4

Fit your ridge bar (2050, 2051, 2052 or 2053). Fit corner plates 1092 at the gable peaks beside plate 2091.

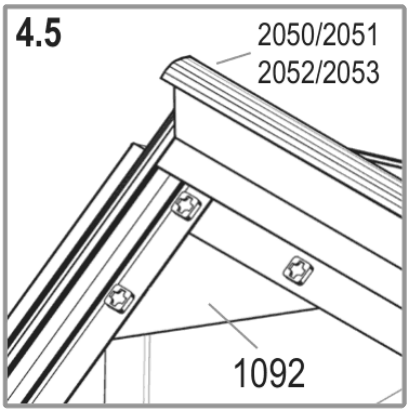

4.5 OUTSIDE VIEW

Fit corner plate 1092 beneath the ridge bar at the gable end, as shown from outside.

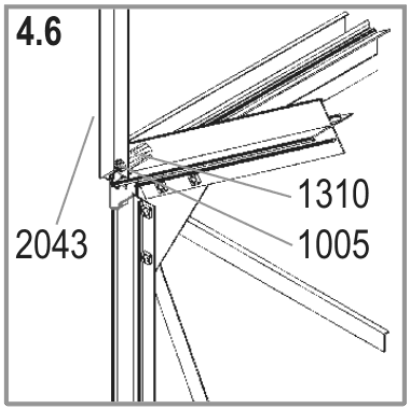

4.6 OUTSIDE VIEW

Fix door runner support 2043 to the gable end with bolt 1005 and spacer 1310.

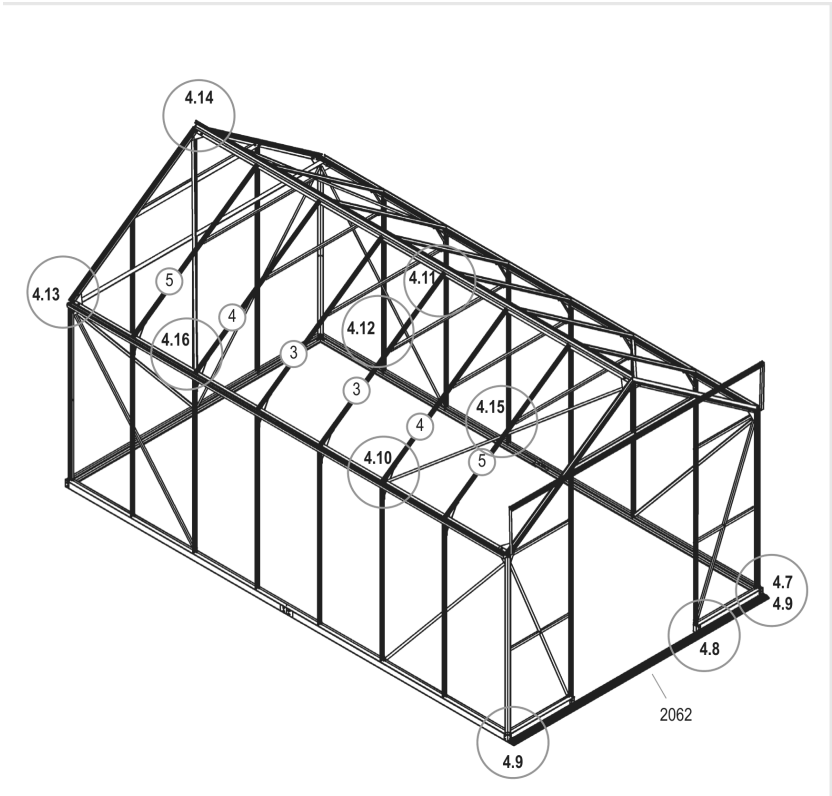

Vitavia drawing 4B. The circled numbers match the pictures below.

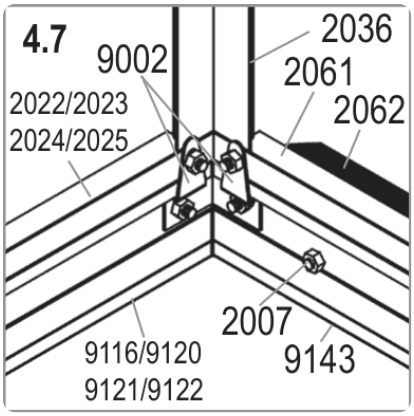

4.7

Lift the assembled frame onto the prepared steel base and connect it loosely with clips 9002.

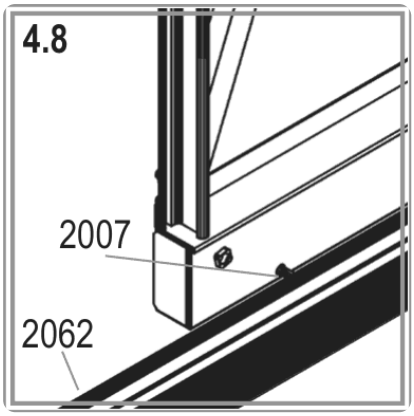

4.8 OUTSIDE VIEW

Slide bolts 2007 into bottom track 2062 and loosely connect it to front base lengths 9142 and 9143. Leave nuts 1002 inside the base loose until both doors are hung at 5.9.

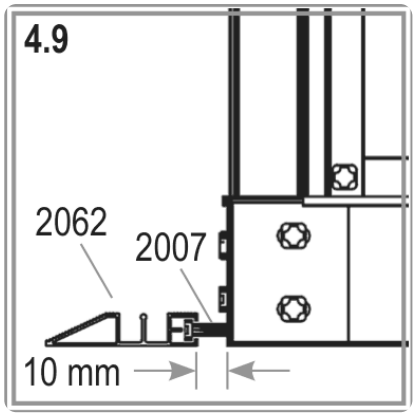

4.9 OUTSIDE VIEW

Position bottom track 2062 and bolt 2007 on the base to match the marked 10 mm measurement.

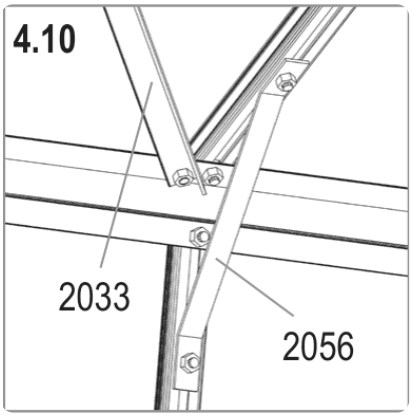

4.10

Bolt the lower end of each roof glazing bar 2055 at the eaves. Connect corner brace 2056 and cross brace 2033 here, as shown.

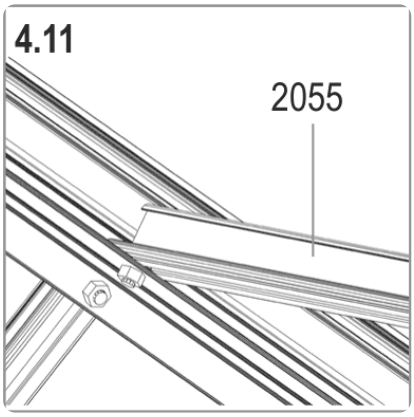

4.11

Bolt each roof glazing bar 2055 to the ridge and insert extra bolts according to your greenhouse size. Read circled bolt counts from both ends of each bar in the drawing.

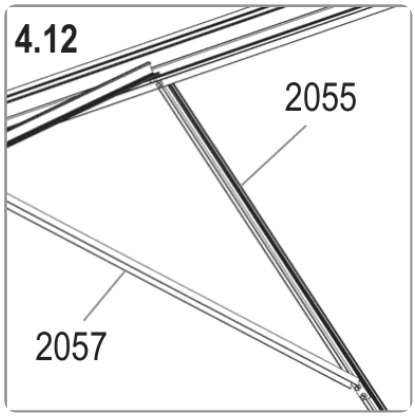

4.12

Connect roof braces 2057 to roof glazing bars 2055.

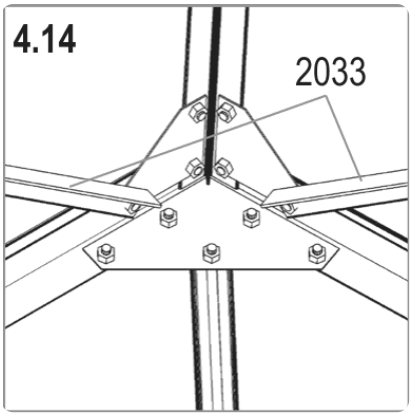

4.14

Connect cross braces 2033 at the gable peak, as shown.

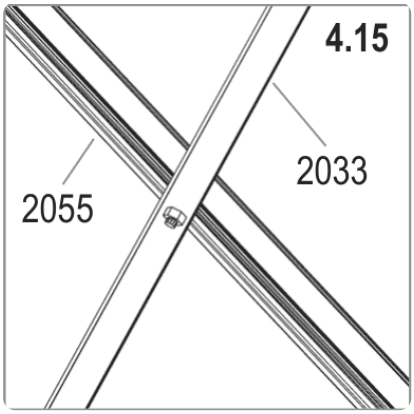

4.15

Bolt cross brace 2033 where it crosses roof glazing bar 2055.

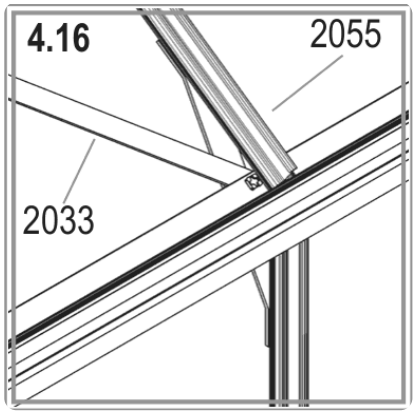

4.16 OUTSIDE VIEW

Connect cross brace 2033 to roof glazing bar 2055, as shown from outside.

DO THIS NOW

Adjust the greenhouse until it is completely square, then tighten all bolts to a maximum of 3 Nm. Do not overtighten.

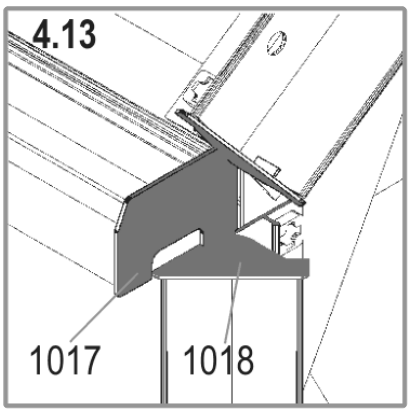

4.13 OUTSIDE VIEW

Press end protectors 1017 and 1018 onto the open profile ends.

STEP 5L

5L Fit the left-hand door

Greenhouse Stores

Build and hang the left-hand door first.

YOU NEED

- **1001** ×2
- **1002** ×2
- **1003** ×16
- **1007** ×2
- **1009** ×2
- **1014** ×2
- **1015** ×2
- **1304** ×2
- **1359** ×1
- **1360** ×1
- **1361** ×2
- **1362** ×1
- **1500** ×1
- **1515** ×1
- **2005** ×1
- **2006** ×2
- **2063** ×1
- **2065** ×1
- **5021** ×1

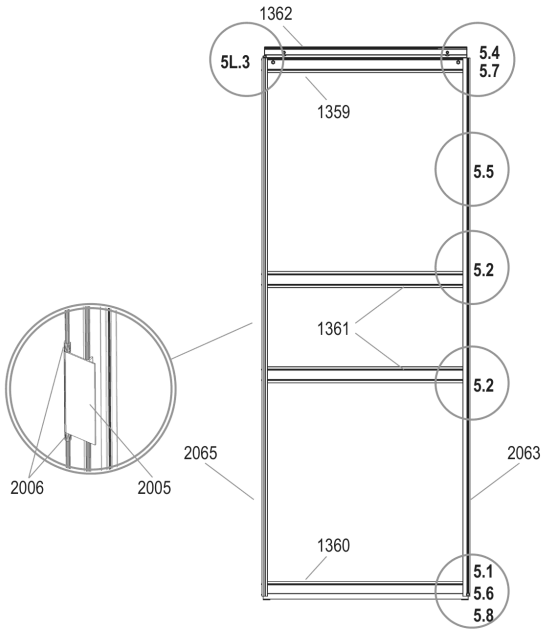

Vitavia drawing 5L. The circled numbers match the pictures below.

INSTALLER TIP

If the door binds or jumps its track, check that the frame is square before you force it.

WATCH OUT

Never stand an assembled door on gliders 1014; this damages them. Use inside side bar 2065 for the left-hand door and 2064 for the right-hand door.

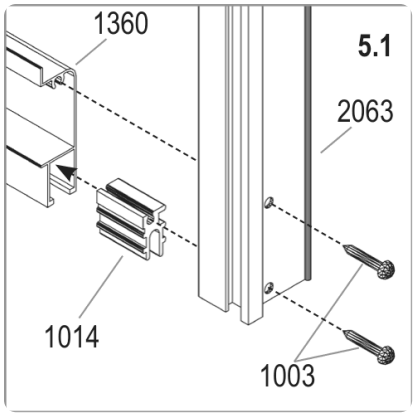

5.1

Push a door glider 1014 onto each end of door bar 1360. Screw it to door bar 2063 with screws 1003.

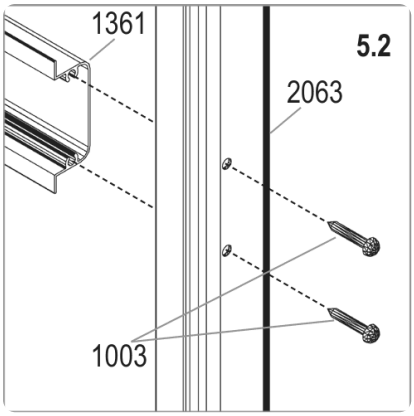

5.2

Screw middle bars 1361 to door bar 2063 with screws 1003.

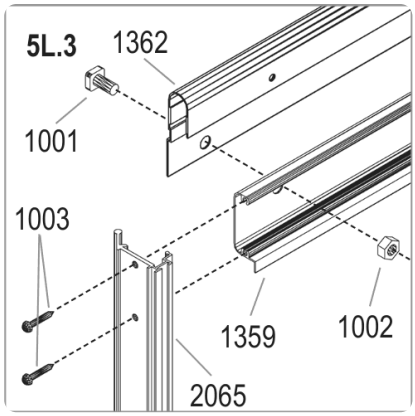

5L.3

Bolt door bar 1362 to upper bar 1359 with bolt 1001 and nut 1002. Screw inside side bar 2065 onto the left-hand door with screws 1003.

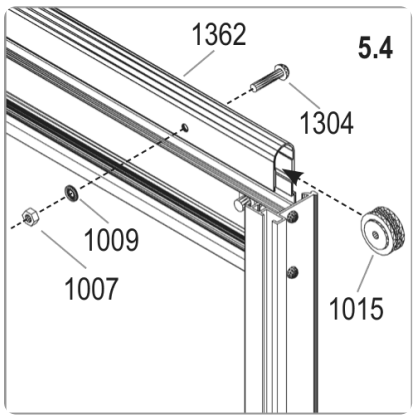

5.4

Fix the two door rollers 1015 to door bar 1362 with bolt 1304, washer 1009 and nut 1007.

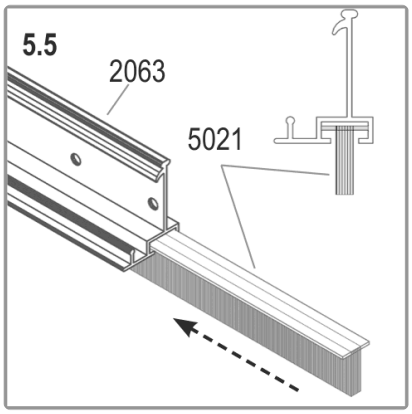

5.5 OUTSIDE VIEW

Slide door seal 5021 into door bar 2063 and cut it to length.

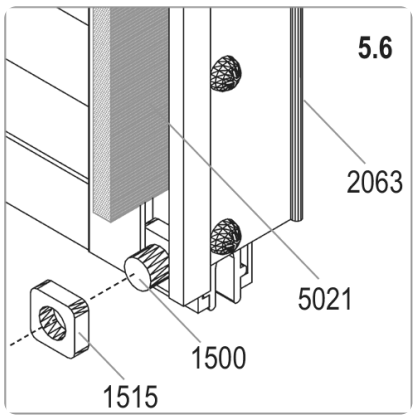

5.6

Slide bolt 1500 into the bottom of the channel for door seal 5021 and secure it with nut 1515.

DO THIS NOW

Fit parts 2005 and 2006 onto inside side bar 2065, as shown in the main door drawing.

DO THIS NOW

Loosen door runner supports 2043 before you hang the door.

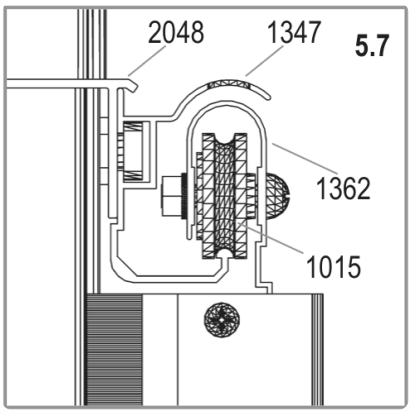

5.7 OUTSIDE VIEW

Lift the door and slide door rollers 1015 into door runner bar 1347.

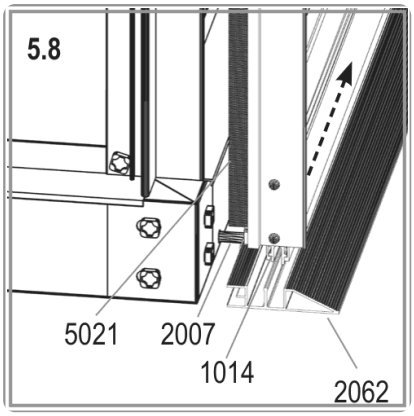

5.8 OUTSIDE VIEW

Check that door gliders 1014 also run on bottom track 2062.

DO THIS NOW

Reconnect door runner supports 2043.

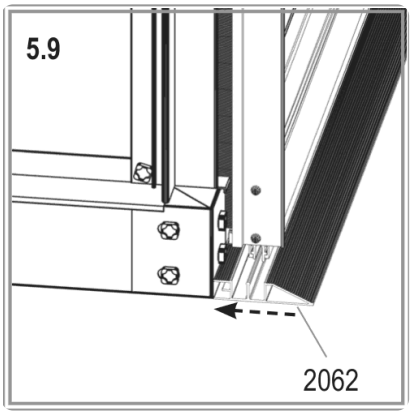

5.9 OUTSIDE VIEW

Leave nuts 1002 on bolts 2007 loose until both doors are hung. Tighten them in step 5R to pull bottom track 2062 against the base lengths.

STEP 5R

5R Fit the right-hand door

Greenhouse Stores

Build and hang the right-hand door, then adjust both doors together.

YOU NEED

1001 ×2	1002 ×3
1003 ×16	1007 ×2
1009 ×2	1014 ×2
1015 ×2	1304 ×2
1359 ×1	1360 ×1
1361 ×2	1362 ×1
1500 ×1	1515 ×1
2001 ×1	2063 ×1
2064 ×1	5021 ×1

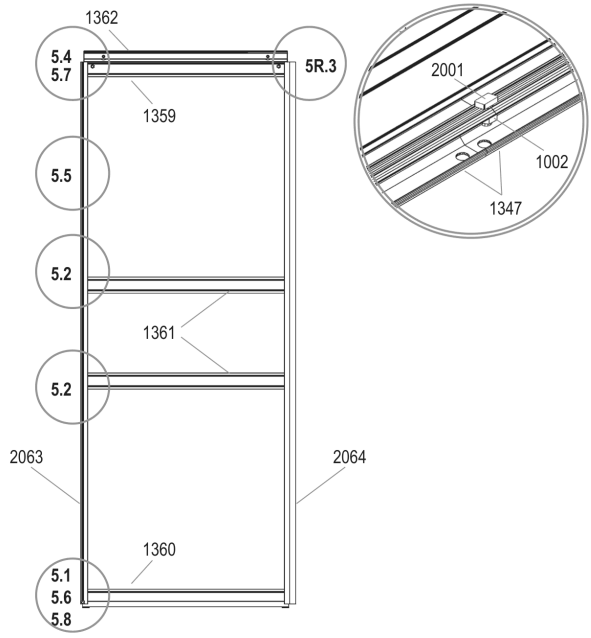

Vitavia drawing 5R. The circled numbers match the pictures below.

INSTALLER TIP

Hang this door the same way as the left-hand door. Adjust both together until they slide freely.

WATCH OUT

Never stand an assembled door on gliders 1014; this damages them.

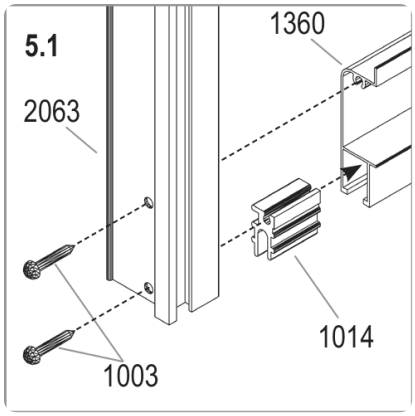

5.1

Push a door glider 1014 onto each end of door bar 1360. Screw it to door bar 2063 with screws 1003.

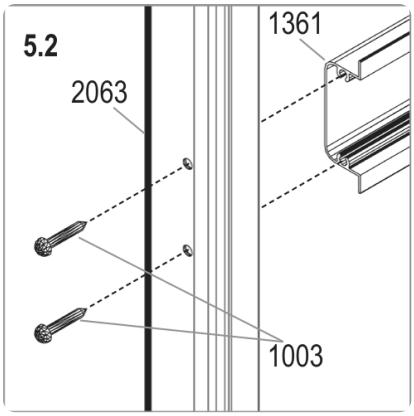

5.2

Screw middle bars 1361 to door bar 2063 with screws 1003.

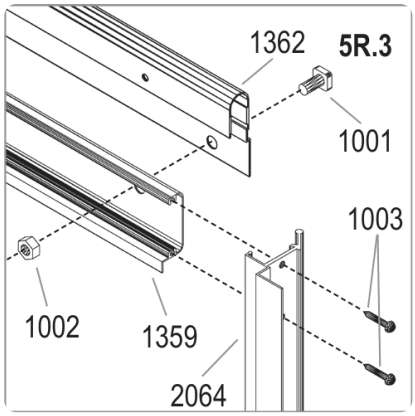

5R.3

Bolt door bar 1362 to upper bar 1359 with bolt 1001 and nut 1002. Screw inside side bar 2064 onto the right-hand door with screws 1003.

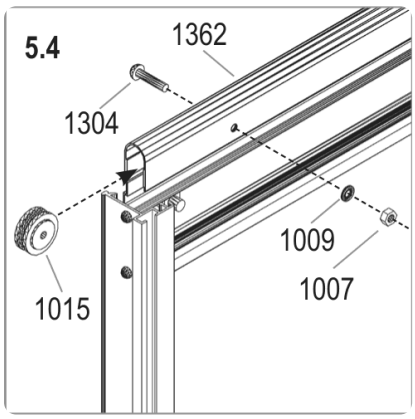

5.4

Fix the two door rollers 1015 to door bar 1362 with bolt 1304, washer 1009 and nut 1007.

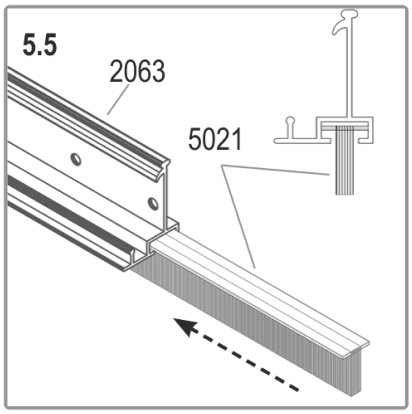

5.5 OUTSIDE VIEW

Slide door seal 5021 into door bar 2063 and cut it to length.

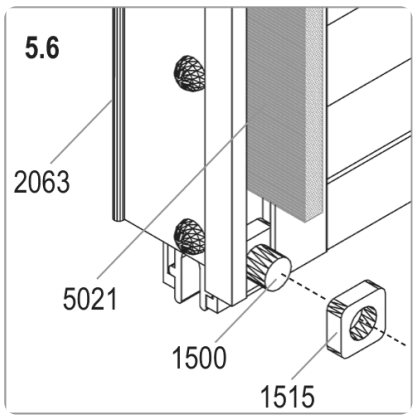

5.6

Slide bolt 1500 into the bottom of the channel for door seal 5021 and secure it with nut 1515.

DO THIS NOW

Join the two door runner bars 1347 with bolt 2001 and nut 1002, as the main drawing's circle shows.

DO THIS NOW

Loosen door runner supports 2043 before you hang the door.

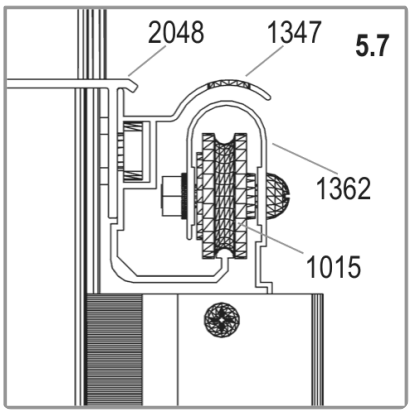

5.7 OUTSIDE VIEW

Lift the door and slide door rollers 1015 into door runner bar 1347.

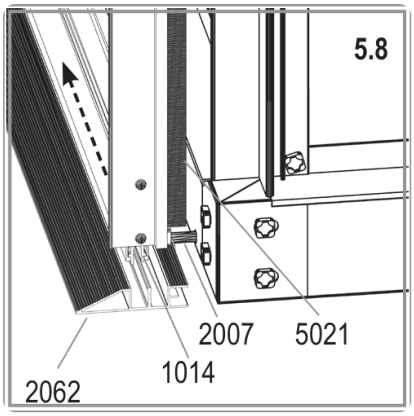

5.8 OUTSIDE VIEW

Check that door gliders 1014 also run on bottom track 2062.

DO THIS NOW

Reconnect door runner supports 2043.

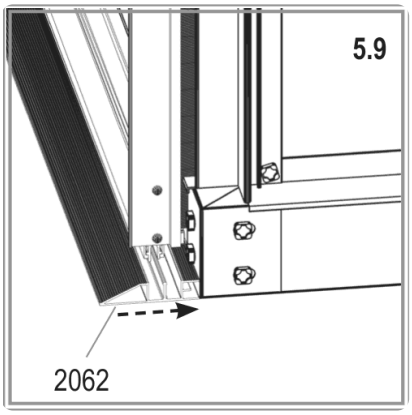

5.9 OUTSIDE VIEW

With both doors hung, tighten nuts 1002 on bolts 2007 to pull bottom track 2062 against the base lengths.

DO THIS NOW

Adjust both doors until they move freely.

STEP 6

6 Build and fit roof vents

Build two vents for the 6700 or four for other sizes, each with one 600 × 544 mm pane.

YOU NEED

- **1001** ×16
- **1002** ×16
- **1006** ×24
- **1019** ×4
- **1063** ×4
- **1064** ×4
- **1065** ×8
- **1066** ×4
- **1067** ×4
- **2016** ×8

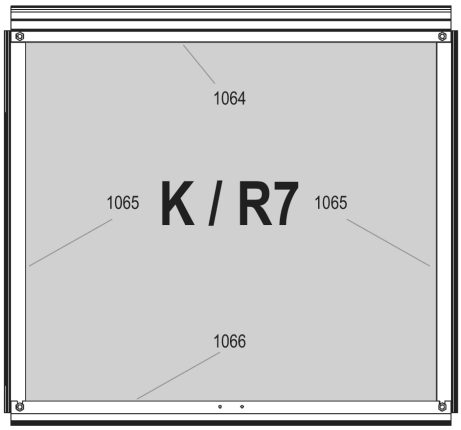

	Art. No.	mm	6700	8300	9900	11500
K / R7	369430 / 3679491	600 x 544	2x	4x	4x	4x

Vitavia drawing 6. The circled numbers match the pictures below.

INSTALLER TIP

Fit the slam bar, window sill 1063, flat edge up, with its grooved lip down towards the pane below. Recheck its position if that pane will not sit snugly.

Watch: Build and fit the window

Scan with your phone camera. Vitavia video.

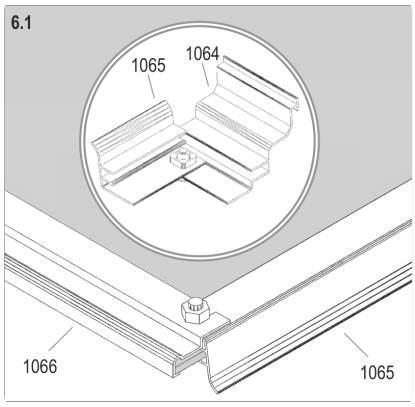

6.1

For panes up to 4 mm thick, join vent side bars 1065 and top bar 1064 as shown here.

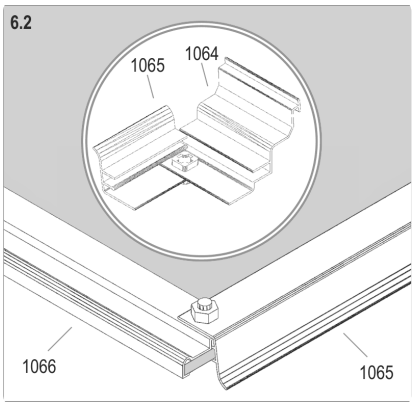

6.2

For panes 4 mm thick and over, join vent side bars 1065 and top bar 1064 as shown here instead.

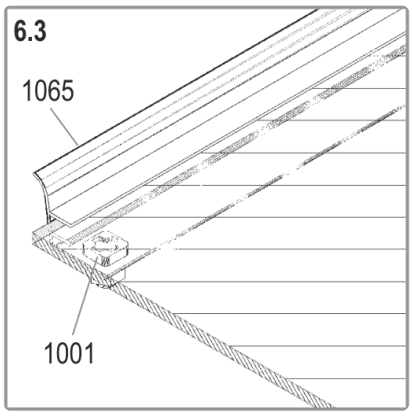

6.3 OUTSIDE VIEW

Insert bottom bar 1066 bolts into the prepared holes and slide the pane into side bar 1065 tracks. Fit bottom bar 1066, square the vent, then tighten all bolts.

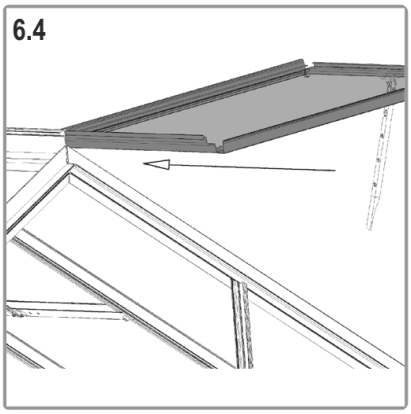

6.4 OUTSIDE VIEW

Hook the vent into the ridge bar from one end of the greenhouse.

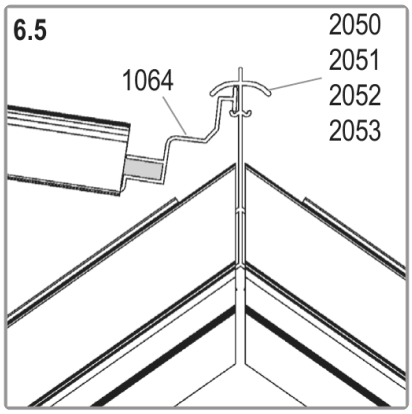

6.5 OUTSIDE VIEW

Hook vent top bar 1064 over your ridge bar (2050, 2051, 2052 or 2053), as shown.

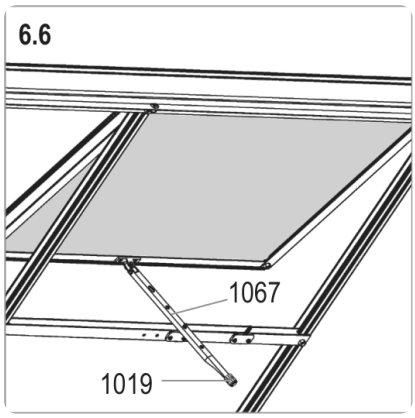

6.6

Slide the vent to your chosen position. Push plastic cap 1019 onto the end of window opener 1067.

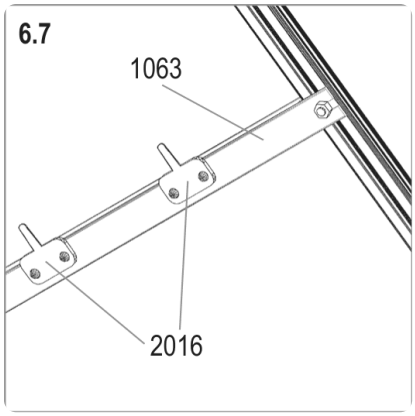

6.7

Fix window sill 1063 to the extra bolts in the roof bars. Fix both window fixers 2016 onto window sill 1063 with screws 1006.

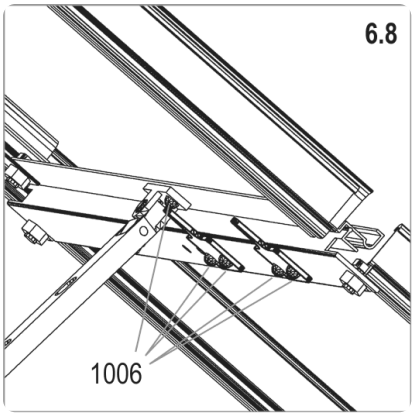

6.8

Screw window opener 1067 to vent bottom bar 1066 with screws 1006.

STEP 7A

7A Polycarbonate roof with glass sides

Greenhouse Stores

Follow this step only for a polycarbonate roof with glass sides and doors.

YOU NEED

- **1011** ×368
- **1020** ×1
- **1313** ×4
- **1314** ×10
- **1317** ×4
- **1318** ×10
- **2399** ×6

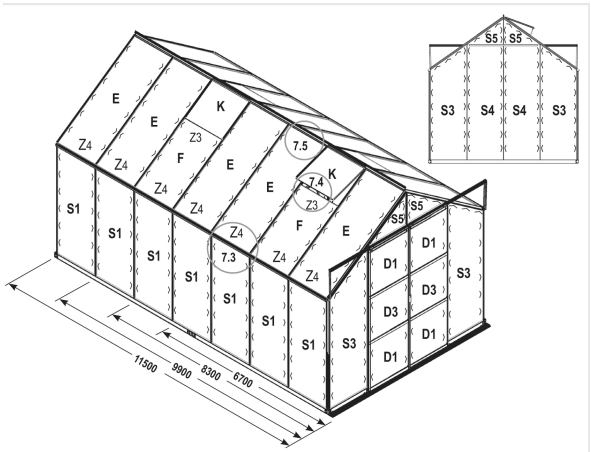

PC	Art. No. 6mm	mm (±3mm)	6700	8300	9900	11500
E	3694716	610 x 1521	6x	6x	8x	10x
F	3694781	610 x 981	2x	4x	4x	4x
K	369430 (4mm)	600 x 544	2x	4x	4x	4x
Total			10x	14x	16x	18x
Glass	Art. No. 3mm	mm				
D1	3679011	610 x 610	4x	4x	4x	4x
D3	3679971	610 x 588	2x	2x	2x	2x
S1	3678301	612 x 1506	8x	10x	12x	14x
S3	3678321	612 x 1959/1530	4x	4x	4x	4x
S4	3678331	612 x 1958	2x	2x	2x	2x
S5	3678341	612 x 430/3	4x	4x	4x	4x
Total			24x	26x	28x	30x

Vitavia drawing 7A. The circled numbers match the pictures below.

INSTALLER TIP

We recommend soaking the whole seal reel in hot soapy water so it presses on more easily. Check the layout if a pane looks too big; it usually belongs elsewhere.

WATCH OUT

Never force a pane; glass can crack. If it will not seat, correct the frame's squareness first.

Watch: Fitting the glazing rubber

Scan with your phone camera. Vitavia video.

DO THIS NOW

Use this layout only for polycarbonate roof sheets E, F and K, with 3 mm glass sides and doors. Otherwise, follow 7B, 7C or 7D.

DO THIS NOW

Face the UV side outside; identify it by the film and edge printing. Remove film completely after fitting; sheets are slightly short for warm-weather expansion.

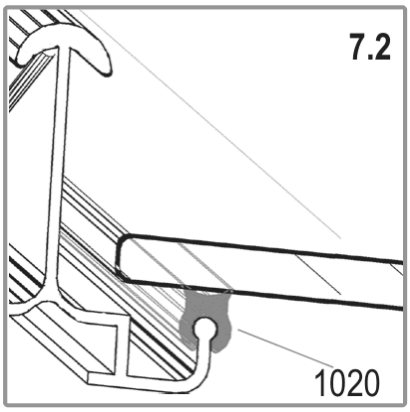

7.2 OUTSIDE VIEW

Press glazing seal 1020 onto the aluminium profiles and cut it to length.

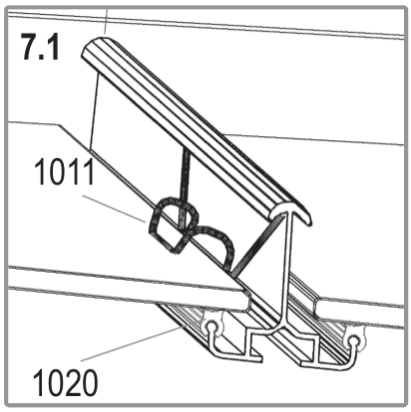

7.1 OUTSIDE VIEW

Fix glass panes and polycarbonate sheets with glazing spring clips 1011. Use the clip count shown for each pane in the layout drawing.

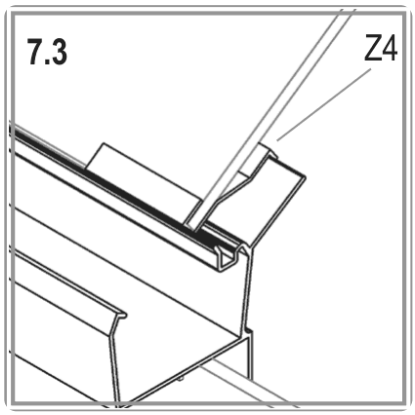

7.3 OUTSIDE VIEW

Connect each roof sheet to the aluminium profile at its middle with Z profile Z4 for extra stability. Use 1314 for 4 mm sheets or 1318 for 6 mm sheets.

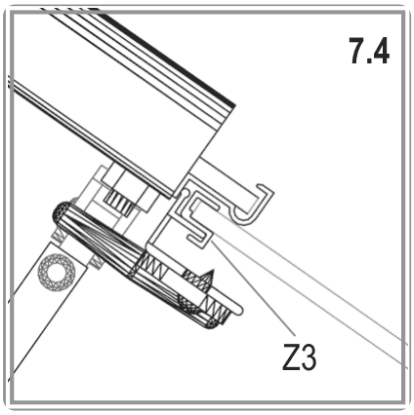

7.4 OUTSIDE VIEW

Fit Z profile Z3 at roof vent pane K, as shown. Use 1313 for 4 mm sheets or 1317 for 6 mm sheets.

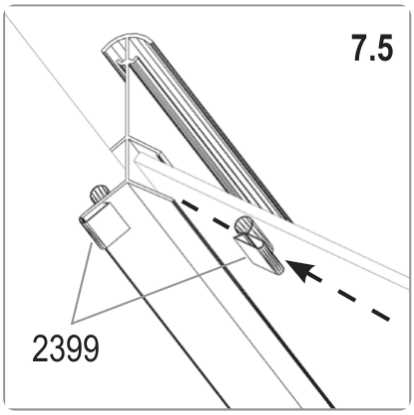

7.5

Push spacers 2399 onto the ridge bar, as shown.

DO THIS NOW

Fit side panes S1, S3, S4 and S5, and door panes D1 and D3, with spring clips 1011. Follow the layout drawing.

Polycarbonate sheets for this layout

PANE	SIZE (MM)	PHOENIX 8300
E	610 × 1521	6
F	610 × 981	4
K	(4mm) 600 × 544	4
	Total	**14**

Glass panes for this layout

PANE	SIZE (MM)	PHOENIX 8300
D1	610 × 610	4
D3	610 × 588	2
S1	612 × 1506	10
S3	612 × 1959/1530	4
S4	612 × 1958	2
S5	612 × 430/3	4
	Total	**26**

Pane letters and numbers match the glazing layout in the drawing above.

STEP 7B

7B Large 3 mm glass panes

Greenhouse Stores

Follow this step only for large 3 mm glass panes throughout, with no polycarbonate.

YOU NEED

- **1011** ×368
- **1020** ×1

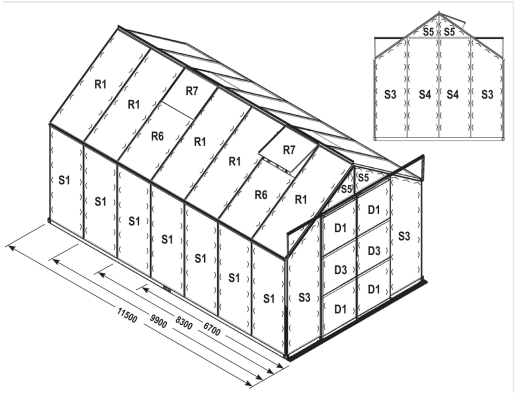

Glass	Art. No. 3mm	mm	6700	8300	9900	11500
D1	3679011	610 x 610	4x	4x	4x	4x
D3	3679971	610 x 588	2x	2x	2x	2x
R1	3678231	612 x 1522	6x	6x	8x	10x
R6	3679681	612 x 982	2x	4x	4x	4x
R7	3679491	600 x 544	2x	4x	4x	4x
S1	3678301	612 x 1506	8x	10x	12x	14x
S3	3678321	612 x 1959/1530	4x	4x	4x	4x
S4	3678331	612 x 1958	2x	2x	2x	2x
S5	3678341	612 x 430/3	4x	4x	4x	4x
Total			34x	40x	44x	48x

Vitavia drawing 7B. The circled numbers match the pictures below.

INSTALLER TIP

We recommend soaking the whole seal reel in hot soapy water so it presses on more easily. Check the layout if a pane looks too big; it usually belongs elsewhere.

WATCH OUT

Never force a pane; glass can crack. If it will not seat, correct the frame's squareness first.

Watch: Fitting the glazing rubber

Scan with your phone camera. Vitavia video.

Watch: Glazing the roof with toughened glass

Scan with your phone camera. Vitavia video.

DO THIS NOW

Use this layout for roof panes R1, R6 and R7, sides S1, S3, S4, S5, and doors D1 and D3. Otherwise, follow 7A, 7C or 7D.

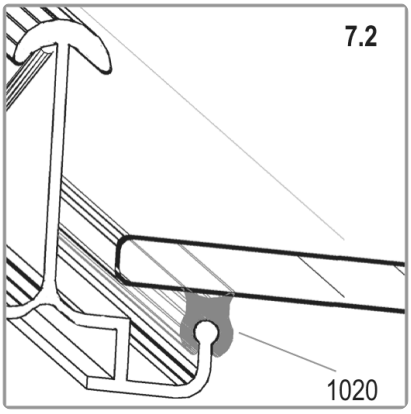

7.2 OUTSIDE VIEW

Press glazing seal 1020 onto the aluminium profiles and cut it to length.

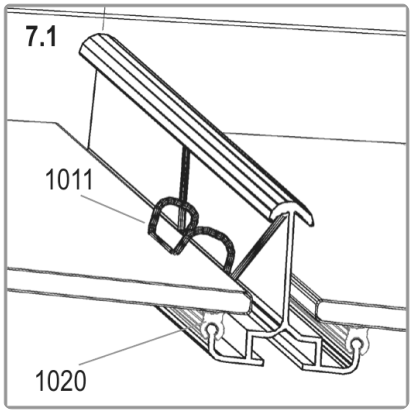

7.1 OUTSIDE VIEW

Fix glass panes with glazing spring clips 1011. Use the clip count shown for each pane in the layout drawing.

DO THIS NOW

Glaze the roof first, then the sides, gables and doors, according to the layout drawing.

Glass panes for this layout

PANE	SIZE (MM)	PHOENIX 8300
D1	610 × 610	4
D3	610 × 588	2
R1	612 × 1522	6
R6	612 × 982	4
R7	600 × 544	4
S1	612 × 1506	10
S3	612 × 1959/1530	4
S4	612 × 1958	2
S5	612 × 430/3	4
	Total	**40**

Pane letters and numbers match the glazing layout in the drawing above.

STEP 7C

Greenhouse Stores

7C Small overlapping horticultural glass panes

Follow this step only for small overlapping horticultural glass panes.

YOU NEED

- **1011** ×368
- **1012** ×108
- **1020** ×1

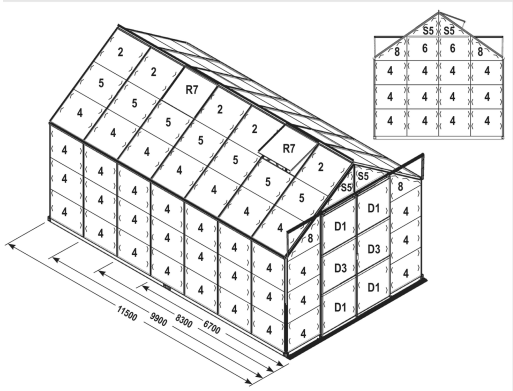

Glass	Art. No. 3mm	mm	6700	8300	9900	11500
2	3679412	610 x 549	6x	6x	8x	10x
4	3679261	610 x 509	50x	58x	66x	74x
5	3679271	610 x 487	8x	10x	12x	14x
6	3679281	610 x 460	2x	2x	2x	2x
8	3679291	610 x 468 / 44	4x	4x	4x	4x
D1	3679011	610 x 610	4x	4x	4x	4x
D3	3679971	610 x 588	2x	2x	2x	2x
R7	3679491	600 x 544	2x	4x	4x	4x
S5	3678341	610 x 430/3	4x	4x	4x	4x
Total			82x	94x	106x	118x

Vitavia drawing 7C. The circled numbers match the pictures below.

INSTALLER TIP

We recommend soaking the whole seal reel in hot soapy water so it presses on more easily. Check the layout if a pane looks too big; it usually belongs elsewhere.

WATCH OUT

Never force a pane; glass can crack. If it will not seat, correct the frame's squareness first.

Watch: Fitting the glazing rubber

Scan with your phone camera. Vitavia video.

Watch: Glazing with horticultural glass

Scan with your phone camera. Vitavia video.

DO THIS NOW

Match your panes to types 2, 4, 5, 6, 8, D1, D3, R7 and S5 in this overlapping-glass layout. Otherwise, follow 7A, 7B or 7D.

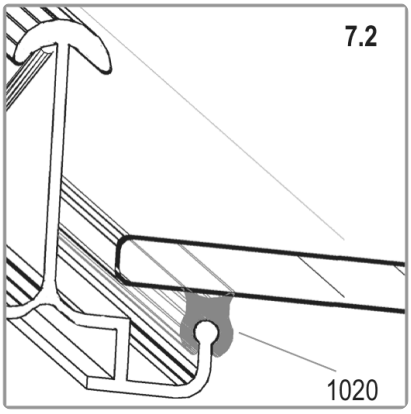

7.2 OUTSIDE VIEW

Press glazing seal 1020 onto the aluminium profiles and cut it to length.

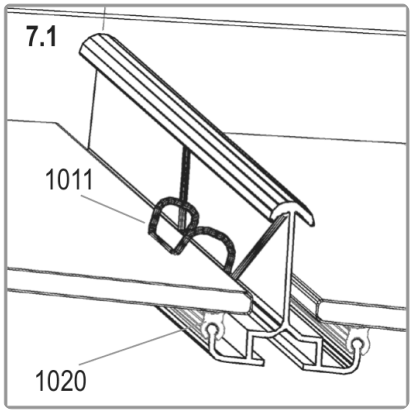

7.1 OUTSIDE VIEW

Start the roof at the eave. Put the first pane in place and secure it with glazing spring clips 1011.

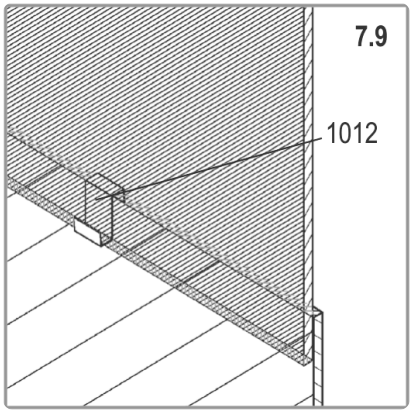

7.9 OUTSIDE VIEW

Overlap each following pane over the pane directly below it. Hold it with glass retaining clips 1012 between the panes.

DO THIS NOW

Start the side glazing at the bottom and work upwards.

Glass panes for this layout

PANE	SIZE (MM)	PHOENIX 8300
2	610 × 549	6
4	610 × 509	58
5	610 × 487	10
6	610 × 460	2
8	610 × 468 / 44	4
D1	610 × 610	4
D3	610 × 588	2
R7	600 × 544	4
S5	610 × 430/3	4
	Total	**94**

Pane letters and numbers match the glazing layout in the drawing above.

STEP 7D

7D Polycarbonate all round

Greenhouse Stores

Follow this step only for 4 mm or 6 mm polycarbonate throughout.

YOU NEED

- **1011** ×368
- **1020** ×1
- **1311** ×16
- **1312** ×10
- **1313** ×16
- **1314** ×10
- **1315** ×16
- **1316** ×10
- **1317** ×16
- **1318** ×10
- **2399** ×6
- **24674** ×6
- **24686** ×6

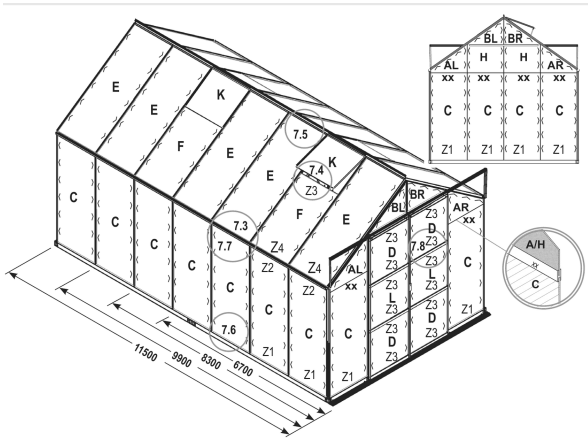

PC	Art. No. 4 mm	Art. No. 6 mm	mm (±3mm)	6700	8300	9900	11500
AL	369860	369930	610 x 25 / 452	2x	2x	2x	2x
AR	369861	369931	610 x 452 / 25	2x	2x	2x	2x
BR	369474R	3694741R	610 x 428 / 2	2x	2x	2x	2x
BL	369474L	3694741L	610 x 2 / 428	2x	2x	2x	2x
C	369471	3694711	610 x 1505	14x	16x	18x	20x
D	369426	3694261	610 x 610	4x	4x	4x	4x
E	3694714	3694716	610 x 1521	6x	6x	8x	10x
F	369478	3694781	610 x 981	2x	4x	4x	4x
H	369862	369932	610 x 445	2x	2x	2x	2x
K	369430	369430 (4mm)	600 x 544	2x	4x	4x	4x
L	369495	3694951	610 x 586	2x	2x	2x	2x
Total				40x	46x	50x	54x

Vitavia drawing 7D. The circled numbers match the pictures below.

INSTALLER TIP

We recommend soaking the whole reel of glazing seal in hot soapy water first. This softens it so it presses on more easily.

WATCH OUT

Keep the protective film on until each sheet is fitted, then remove it completely. Check that the UV side faces outside.

Watch: Fitting the glazing rubber

Scan with your phone camera. Vitavia video.

DO THIS NOW

Use this layout only for polycarbonate throughout, with sheets AL, AR, BL, BR, C, D, E, F, H, K and L. Otherwise, follow 7A, 7B or 7C.

DO THIS NOW

Face the UV side outside; identify it by the film and edge printing. Remove film completely after fitting; sheets are slightly short for warm-weather expansion.

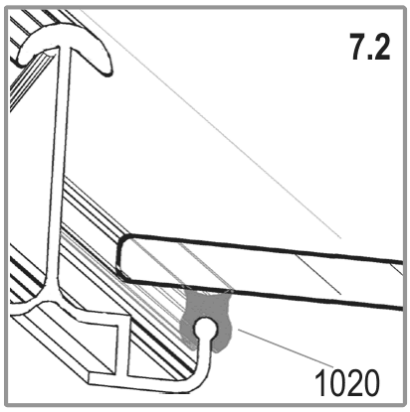

7.2 OUTSIDE VIEW

Press glazing seal 1020 onto the aluminium profiles and cut it to length.

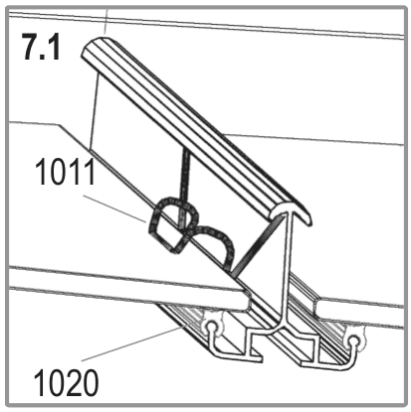

7.1 OUTSIDE VIEW

Fix polycarbonate sheets with glazing spring clips 1011. Use the clip count shown for each sheet in the layout drawing.

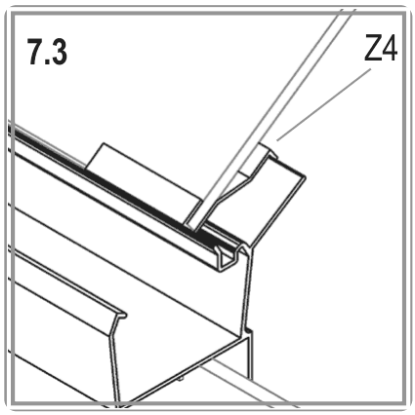

7.3 OUTSIDE VIEW

Connect each roof sheet to the aluminium profile at its middle with Z profile Z4 for extra stability. Use 1314 for 4 mm sheets or 1318 for 6 mm sheets.

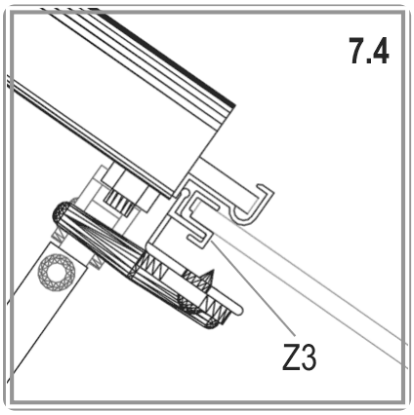

7.4 OUTSIDE VIEW

Fit Z profile Z3 at roof vent pane K, as shown. Use 1313 for 4 mm sheets or 1317 for 6 mm sheets.

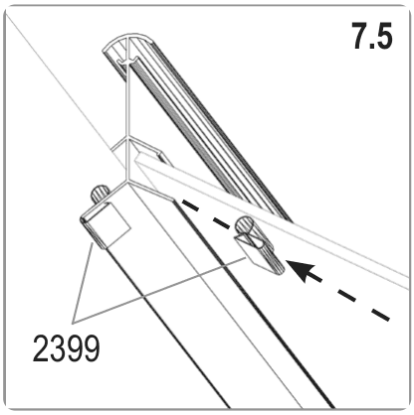

7.5

Push spacers 2399 onto the ridge bar, as shown.

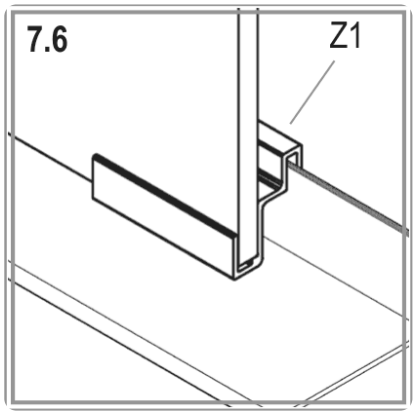

7.6 OUTSIDE VIEW

Fit Z profile Z1 where the layout drawing shows it. Use 1311 for 4 mm sheets or 1315 for 6 mm sheets.

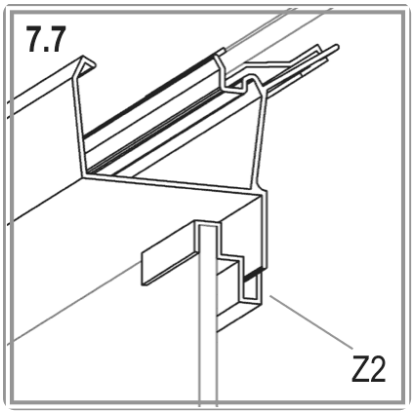

7.7 OUTSIDE VIEW

Fit Z profile Z2 where the layout drawing shows it. Use 1312 for 4 mm sheets or 1316 for 6 mm sheets.

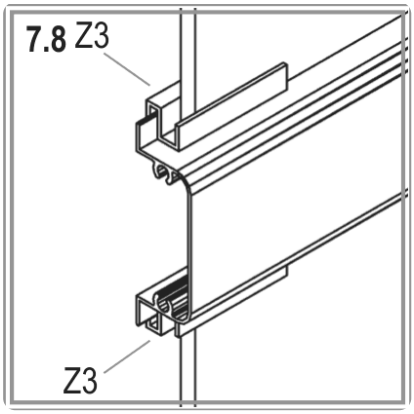

7.8 OUTSIDE VIEW

Fit Z profiles Z3 onto door sheets D and L, as shown. Use 1313 for 4 mm sheets or 1317 for 6 mm sheets.

DO THIS NOW

Fit gable sheets AL, AR and H above sheets C, with an xx profile between them, as circled. Use 24674 for 4 mm sheets or 24686 for 6 mm sheets.

Polycarbonate sheets for this layout

PANE	SIZE (MM)	PHOENIX 8300
AL	610 × 25 / 452	2
	610 × 452 / 25	2
C	610 × 1505	16
	610 610	4
E	610 × 1521	6
F	610 × 981	4
H	610 × 445	2
K	(4mm) 600 × 544	4
L	610 × 586	2
	Total	**46**

Pane letters and numbers match the glazing layout in the drawing above.

LAST JOBS

Finish and look after it

Finish

- [ ] Fill the holes for the anchor legs with concrete.
- [ ] Also fix the steel base to the foundation with screws and wall plugs (not supplied). Use both concrete and screws, as the manufacturer requires.
- [ ] If you wish, seal the edges with neutral silicone (not supplied).
- [ ] Stick the warning label inside the greenhouse.
- [ ] Stick the greenhouse model label onto door bar 1362. You will need it to order spare parts.
- [ ] Keep this guide somewhere safe.

Looking after it

- [ ] Shut all doors and vents in high winds.
- [ ] Clear the roof or support it in heavy snow. Heat the greenhouse in winter.
- [ ] Wash the greenhouse occasionally with a mild detergent that does not attack aluminium or the glass fixing clips.
- [ ] Keep the upper and lower door tracks clean to prevent grit build-up.
- [ ] Add the greenhouse to your home insurance and check local building rules about its position.

Drawings reproduced from the Vitavia assembly instructions (Vitavia manual 060.01.1511 (Phoenix)). Greenhouse Stores, greenhousestores.co.uk.